Arab Academy for Science, Technology & Maritime Transport
Colleague of Engineering & Technology
Construction & Building Engineering

CB 523
Methods and Equipment for Construction 1

Lecture 8&9:

Cranes

Instructor: Dr. Ahmed Elyamany

- **Introduction to Cranes;**
- **Derrick cranes,**
- **Mobile cranes,**
- **Tower cranes.**

What is a crane?

- A crane is an equipment used for raising or lowering a load and moving it horizontally including the supporting structure of the crane and its foundations.

Cranes

- *Cranes* are primarily used for **lifting**, **lowering**, and **transporting** loads.
- They move loads **horizontally** by swinging or traveling.
- Most mobile cranes consist of a **carrier** and superstructure equipped with a **boom and hook**

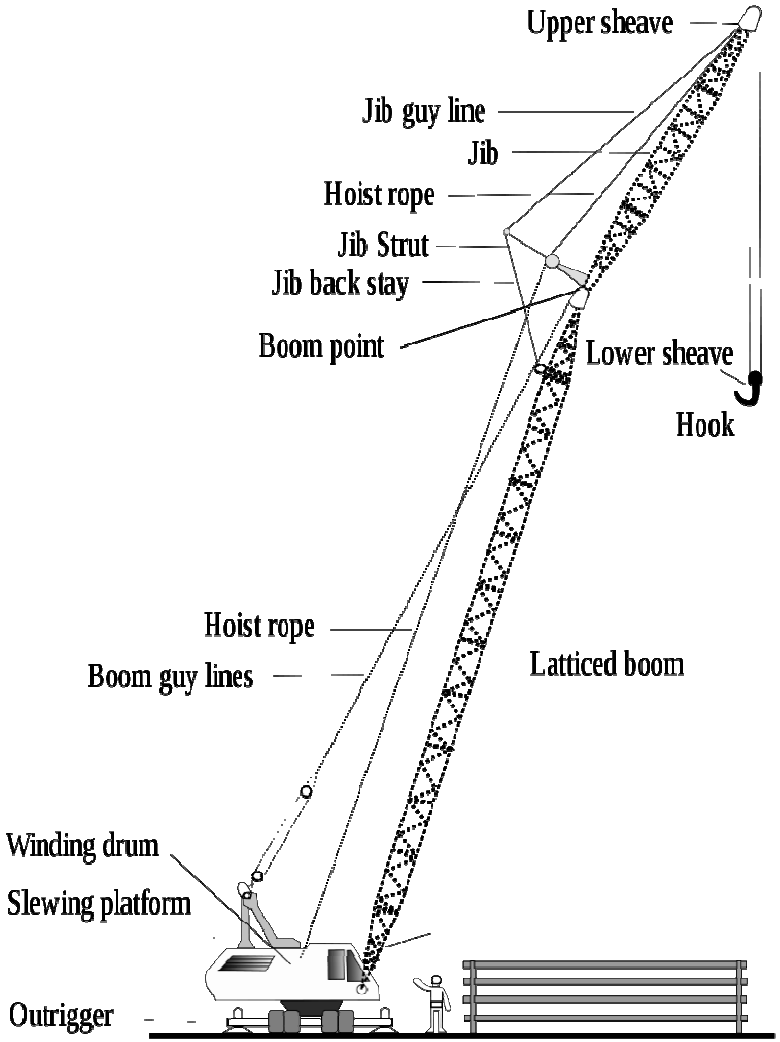

Cranes

- The current trend toward the use of hydraulically operated equipment includes hydraulically powered telescoping boom cranes.
- The mobile telescoping boom crane shown in Figure is capable of lifting loads to the top of a 24-story building.

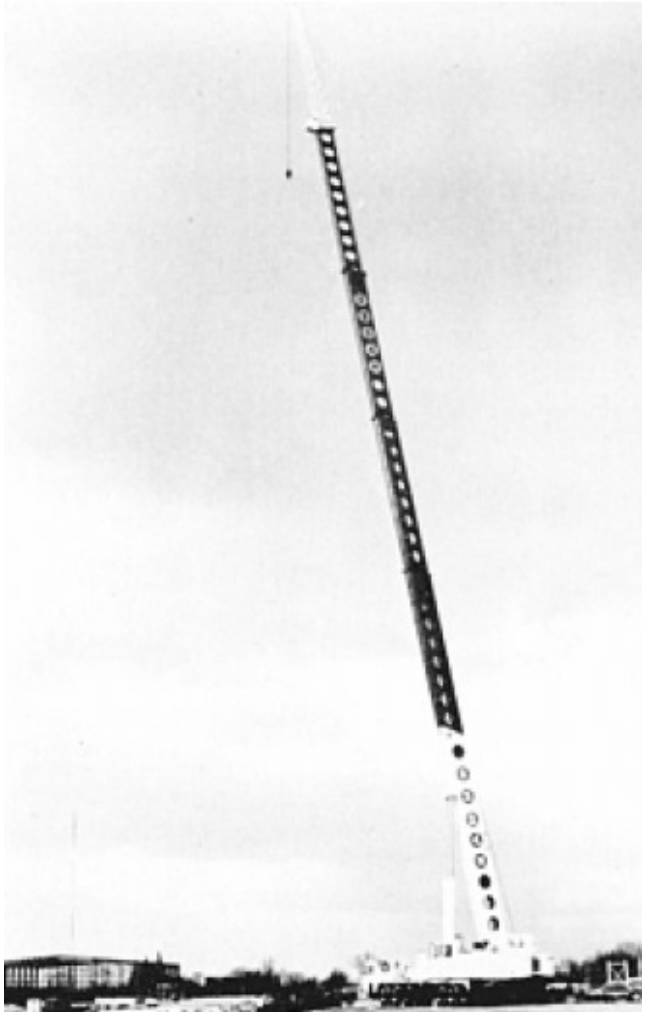

Cranes

- The **major factor** controlling the load that may be safely lifted by a crane is its ***operating radius*** (horizontal distance from the center of rotation to the hook).
- Some of the other factors influencing a crane's safe lifting capacity include the **position of the boom** in relation to the carrier, whether or not *outriggers* (beams that widen the effective base of a crane) are used, the amount of **counterweight**, and the condition of the **supporting surface**.

Cranes

- **Safety** regulations **limit maximum crane load** to a percentage of the *tipping load* (load that will cause the crane to actually begin to tip).
- Crane manufacturers provide **charts** giving the **safe load capacity** of the machine under various conditions.
- Notice that load-handling devices are considered part of the load and their weight must be included in the maximum safe load capacity calculation.
- Electronic load indicators are available that measure the actual load on the crane and provide a warning if the safe capacity is being exceeded.

Heavy Lift Cranes

- Cranes intended for lifting very heavy loads are usually **crawler-mounted lattice-boom** models such as that shown in Figure.
- The crane shown has a maximum **lifting capacity** of **230 tons** and a maximum **lifting height** of **371.5 ft** (113.3 m).

Heavy Lift Cranes

- To lift even heavier loads, **several cranes** can be used together or the crane can be modified to allow the **use of extra counterweight**.
- Use of extra counterweight can boost the maximum capacity to **600 tons** (544 t).

Crane Types

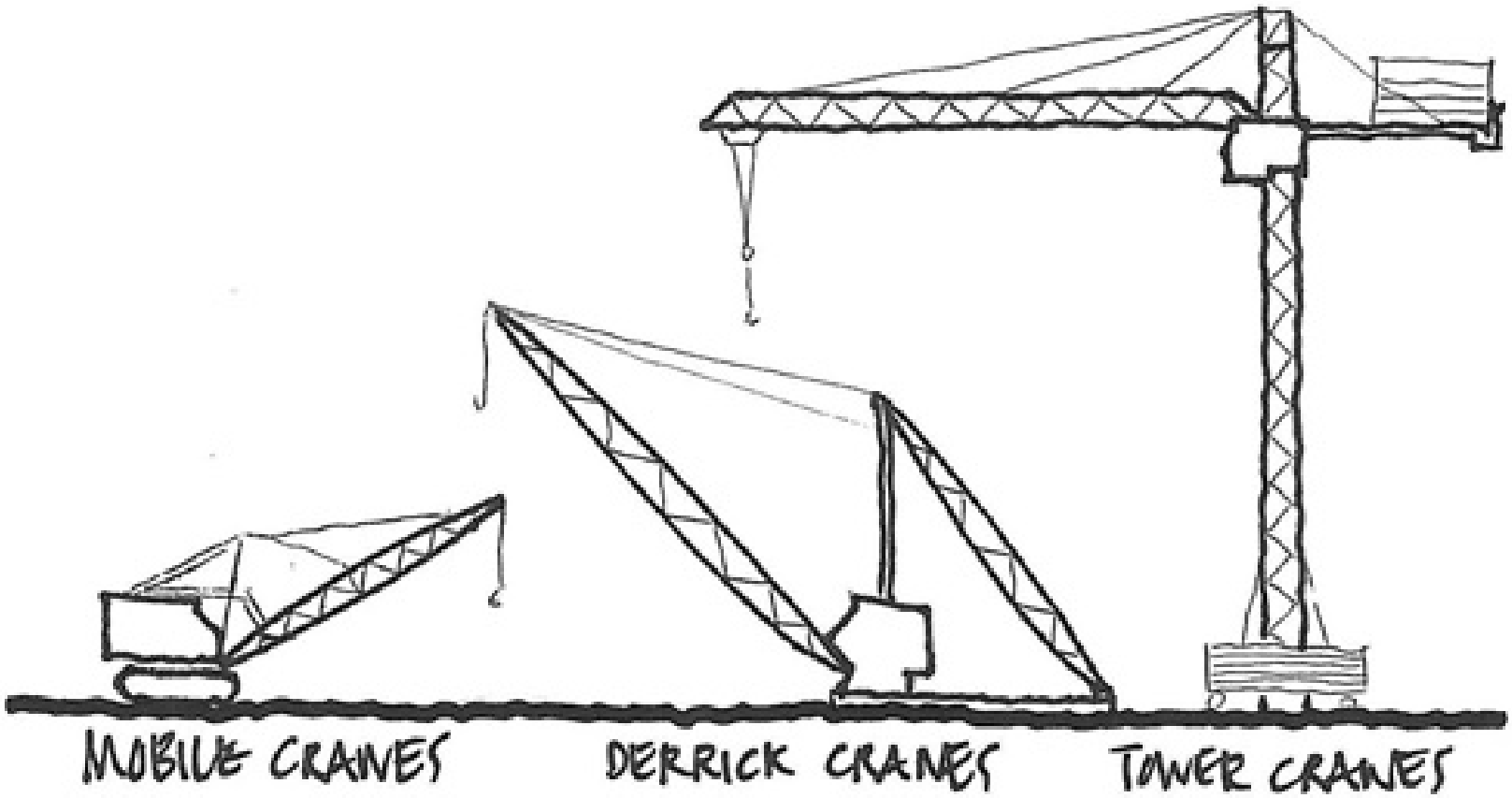

Derrick Crane

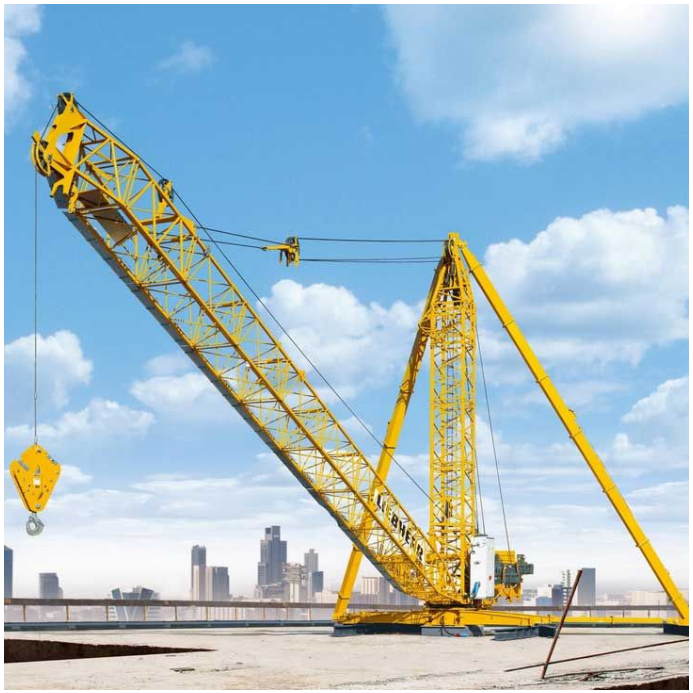

Derrick Crane

- **Crane** having a boom hinged near the base of the **mast** so as to rotate about the mast, for moving a load toward or away from the mast by raising or lowering the boom.

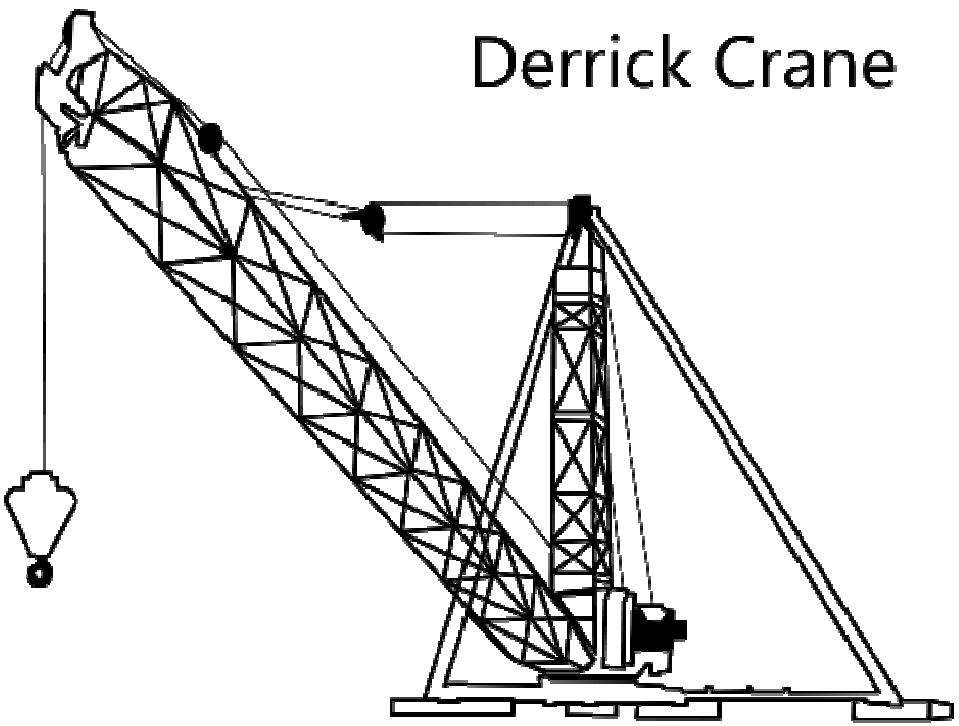

Mobile Cranes

Mobile Crane

- **Wheel-mounted Crane:**
  - **Telescoping Boom (Single Control Station)**
  - **Telescoping Hydraulic Boom (Multiple Control Station)**
  - **Latticework Boom (Multiple Control Station)**
- **Truck-mounted Crane**
  - **with Hydraulic Boom**
  - **with Articulated Boom**
- **Crawler-mounted Crane (with Latticework Boom)**

Crawler-Mounted Crane

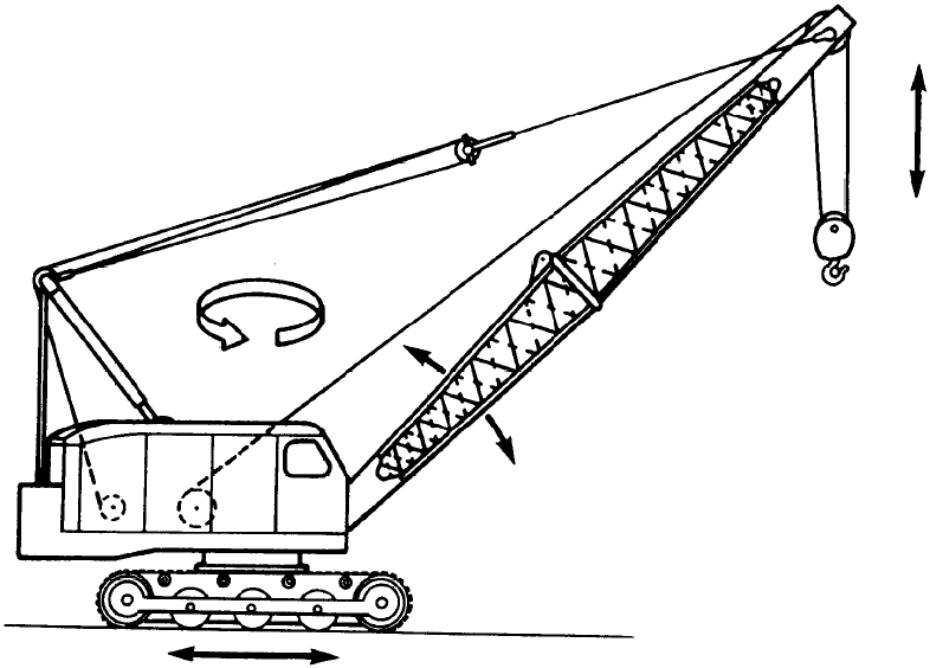

Crawler-Mounted Crane

- a crane with a **Latticework Boom** mounted on crawlers that provide **stability** and **mobility**.
- Crawler cranes range in lifting capacity from about **36** tons to **3175** tons.
- Crawler cranes have both advantages and disadvantages depending on their use.

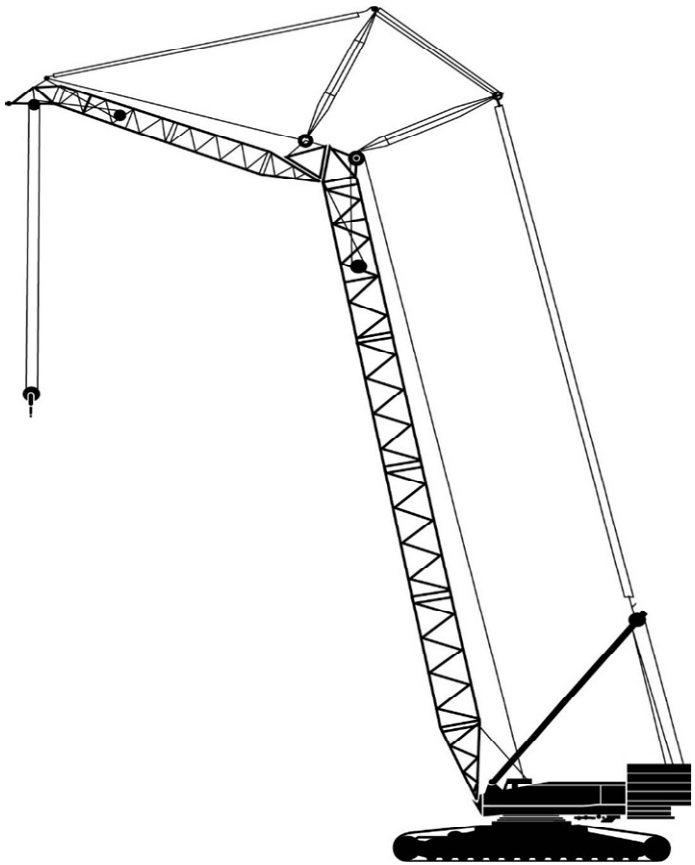

Crawler-Mounted Crane

- Their main **advantage** is that they can move around on site and perform each lift with little setup, since the crane is stable on its tracks with no outriggers.
- In addition, a crawler crane is capable **of traveling with a load**.

Crawler-Mounted Crane

- The main **disadvantage** is that they are **very heavy**, and cannot easily be moved from one job site to another without significant **expense**.
- Typically a large crawler must be **disassembled** and moved by trucks, rail cars or ships to its next location.

Wheel-Mounted Crane

- A crane mounted on a **truck carrier** provides the mobility for this type of crane.
- Generally, these cranes are able to **travel on highways**, eliminating the need for special equipment to transport the crane.

Wheel-Mounted Crane

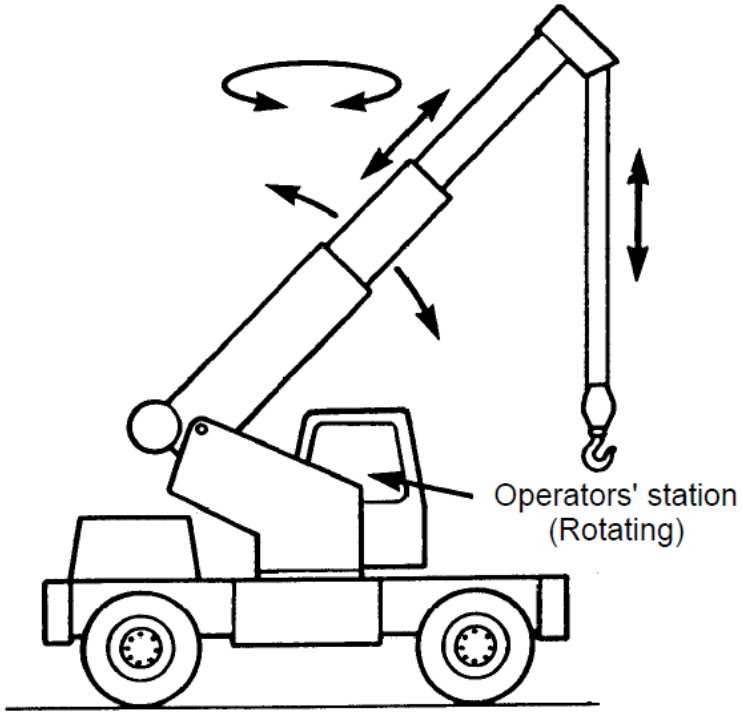

Telescoping Boom (Single Control Station)

Wheel-Mounted Crane

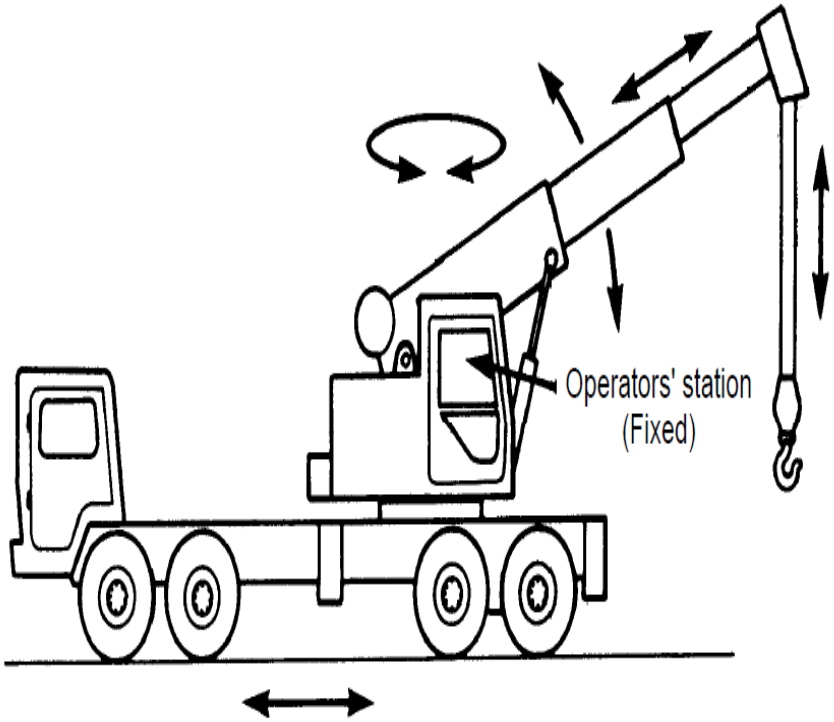

Telescoping Hydraulic Boom (Multiple Control Station)

Wheel-Mounted Crane

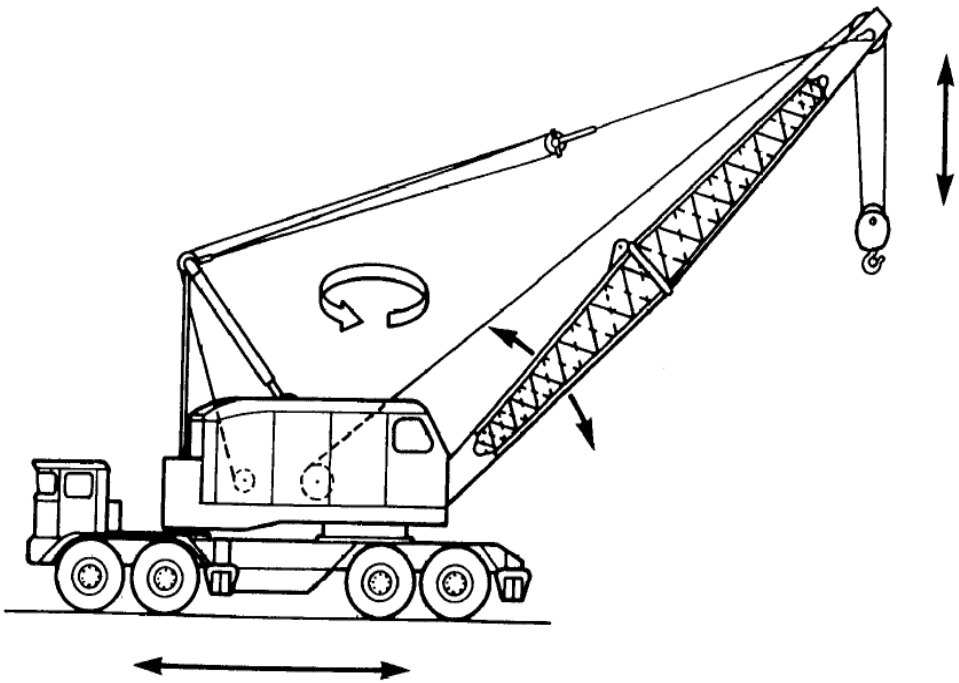

Latticework Boom (Multiple Control Station)

Wheel-Mounted Crane

- When **working on the jobsite**, **outriggers** are extended **horizontally** from the chassis then **vertically** to level and stabilize the crane while stationary and hoisting.
- Many truck cranes have **slow-travelling** capability while suspending a load.

Wheel-Mounted Crane

- Most cranes of this type also have **moving counterweights** for stabilization beyond that provided by the **outriggers**.
- Crane weight acts as a counterweight.
- Truck cranes range in lifting capacity from about **13 US** tons to about **1180** tons.

Rough Terrain Crane

- A crane mounted on an undercarriage with **4 rubber tires** that is designed for **pick-and-carry operations** and for off-road and “rough terrain” applications.
- **Outriggers** are used to level and stabilize the crane for hoisting.

Rough Terrain Crane

- Cranes are **single-engine machines**, powering the undercarriage and the crane, similar to a crawler crane.
- The engine is usually mounted in the undercarriage rather than in the upper, as with crawler crane.

All Terrain Crane

- A mobile crane can **travel at speed** on public roads, and on rough terrain at the job site using **all-wheel steering**.
- Combine the road ability of **Truck-mounted Cranes** and the maneuverability of **Rough Terrain Cranes**.
- Have **2-9 axles** and are designed for lifting loads up to **1200** tons.

Telescopic Crane

- A telescopic crane has a boom that consists of a number of tubes fitted one inside the other.
- A hydraulic or other powered mechanism extends or retracts the tubes to increase or decrease the total length of the boom.

Telescopic Crane

- These types of booms are often used for **short term construction projects**, rescue jobs, lifting boats in and out of the water, etc.
- The relative compactness of telescopic booms make them adaptable for many mobile applications.

Truck-mounted Crane

- **Truck-mounted Crane** (loader crane) is a hydraulically-powered arm fitted to a
- Used for loading / unloading the vehicle.

Truck-mounted Crane

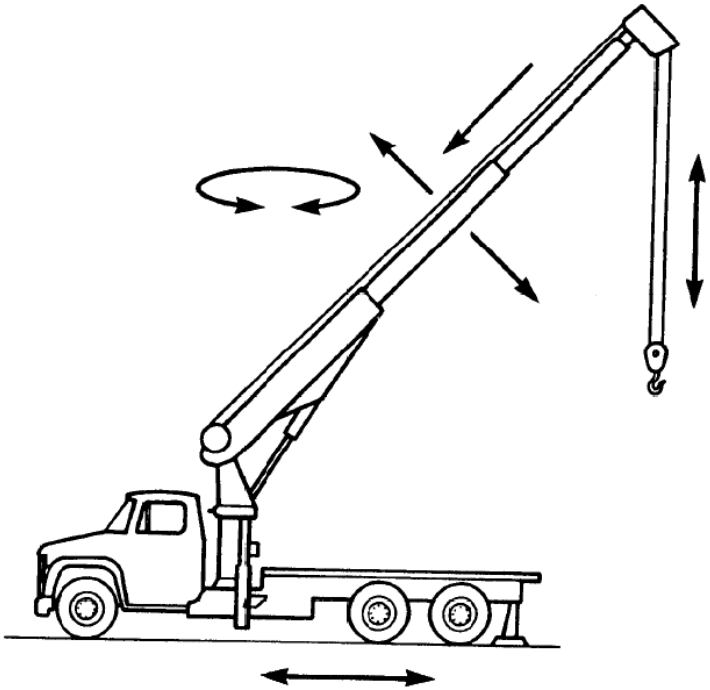

with Hydraulic Boom

Truck-mounted Crane

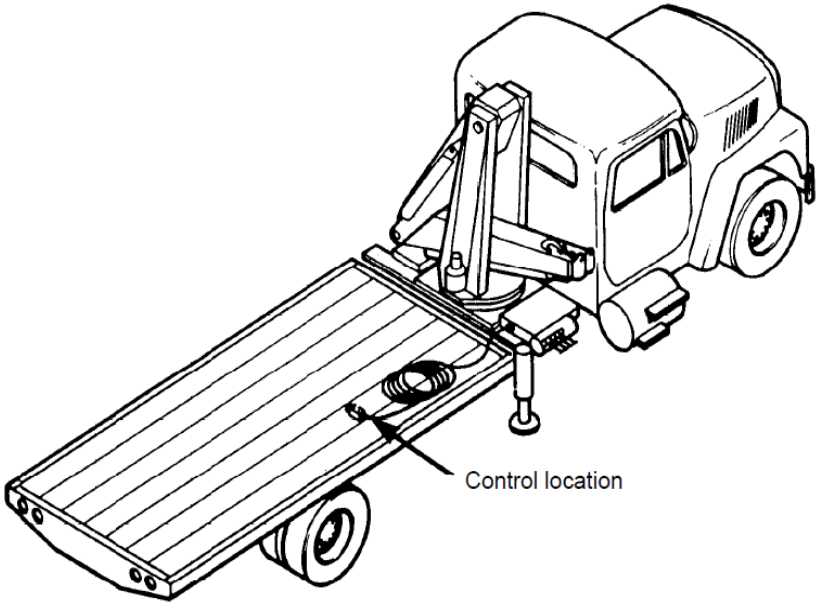

with Articulated Boom

Straddle Cranes

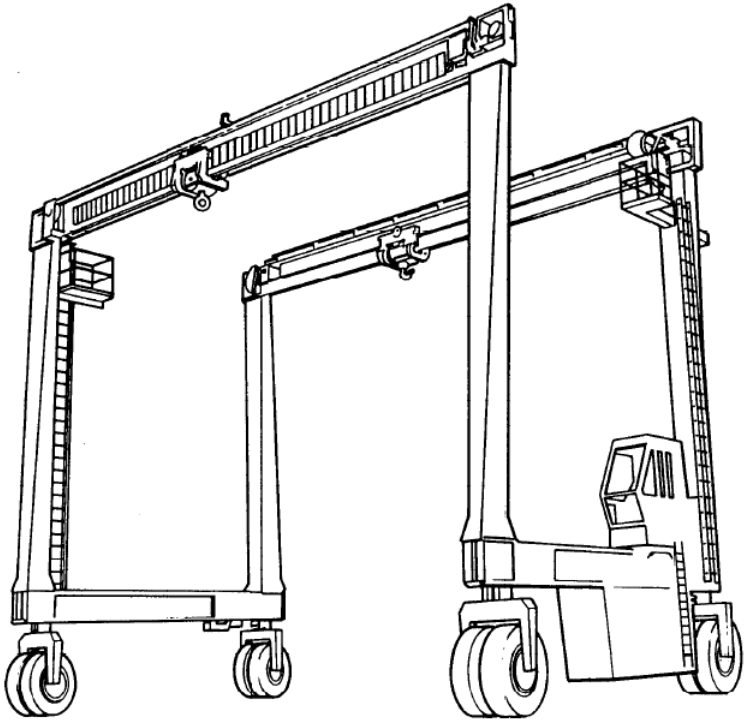

Aerial Crane

- Aerial crane or '**Sky cranes**' usually are helicopters designed to lift large loads.
- Use in areas that are difficult to reach by conventional cranes.
- Most commonly used to lift units/loads onto high-rises.
- They also perform disaster relief after during wild-fires they are able to carry huge buckets of water to extinguish fires.

Gantry Crane

- A gantry crane has a hoist in a fixed machinery house or on a trolley that runs horizontally along rails.

Gantry Crane

- These cranes come in all sizes.
- A special version is the container crane designed for loading and unloading ship-borne containers at a port.

Side-lift Crane

- A side lifter crane is a road-going truck or semi-trailer, able to hoist and transport ISO standard containers.
- Container lift is done with parallel crane-like hoists, which can lift a container from the ground or from a railway vehicle.

Overhead Crane/suspended crane

- This crane work very similar to a gantry crane
- Instead of the whole crane moving, only the hoist/trolley assembly moves in one direction along two fixed beams,
- Often mounted along the side walls in the assembly area of factory.

Deck Crane

- Located on the ships and boats,
- Used for cargo operations or boat unloading and retrieval where no shore unloading facilities are available.
- Most are diesel-hydraulic or electric-hydraulic.

Tower Cranes

Tower Cranes

- Another special type of crane is the *tower crane (***Hammerhead tower crane***).*
- Usually, fixed to the **ground** and sometimes attached to the **sides of structures** as well.

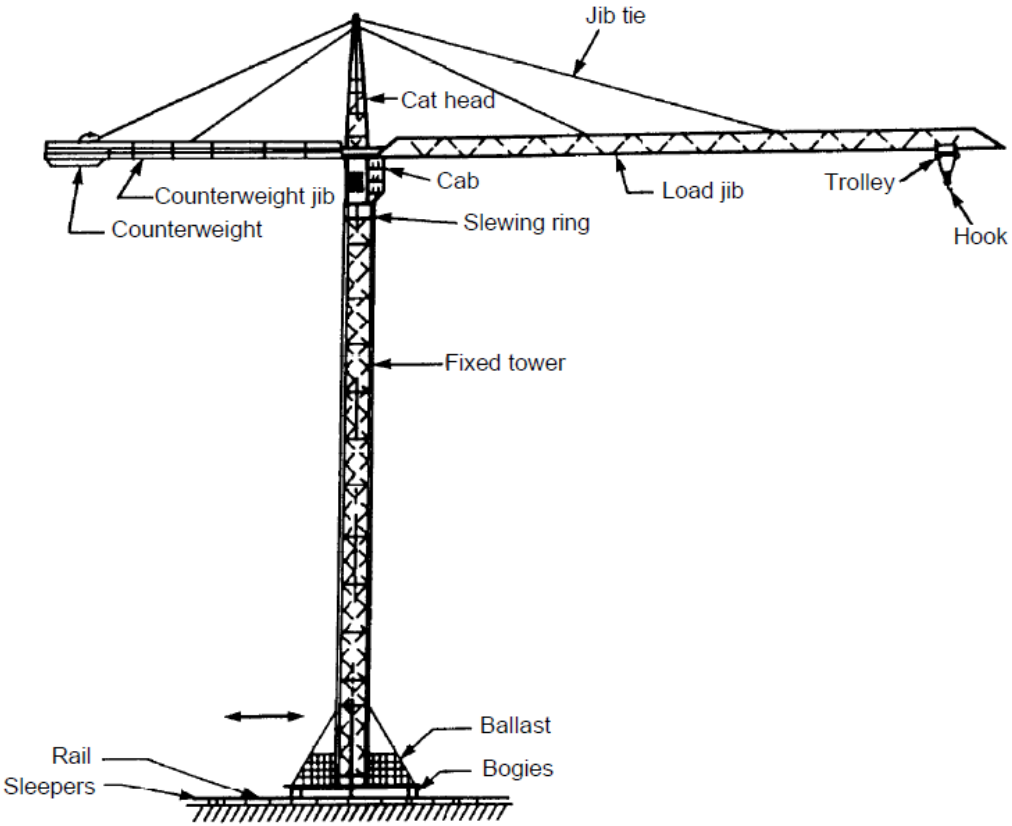

Tower Cranes

- Tower cranes often give the **best combination** of **height** and **lifting capacity** and are used in the **construction of tall buildings**.

Tower Cranes

- The **jib (boom)** and **counter-jib** are mounted to the turntable, where the slewing machinery are located.
- The **counter-jib** carries a counterweight, usually of concrete blocks, while the **jib** suspends the load from the trolley.

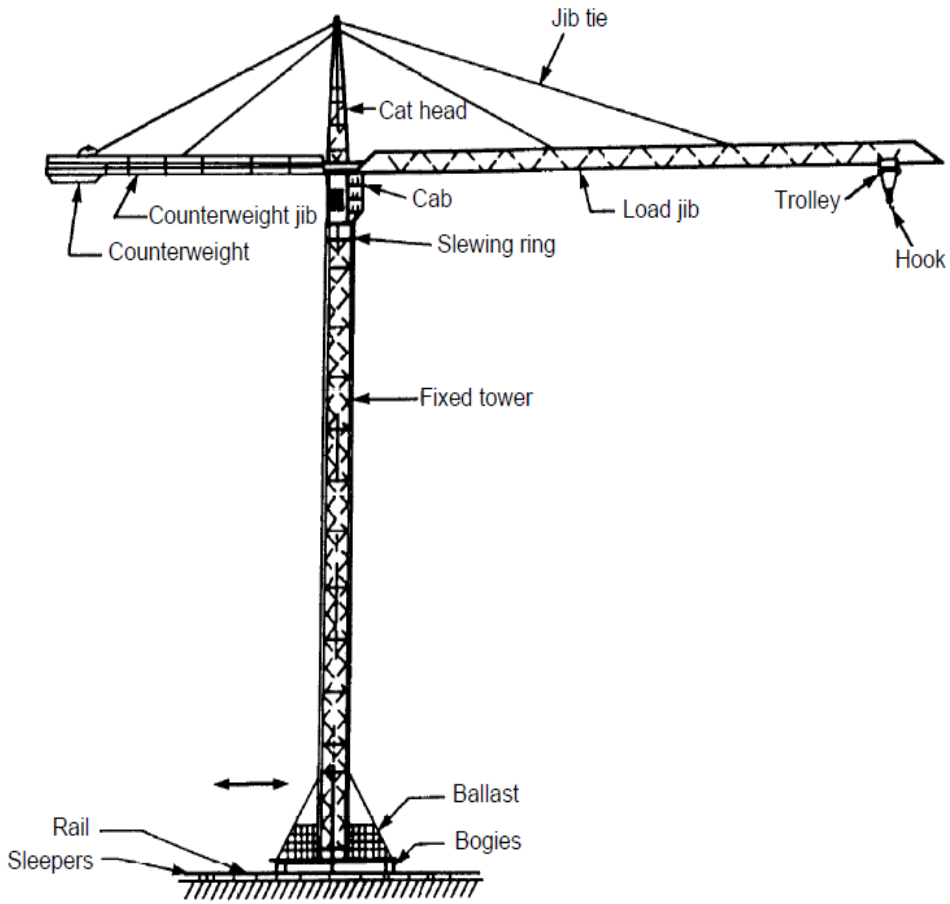

Tower Cranes

- The **Hoist motor** and transmissions are located on the mechanical deck on the **counter-jib**, while the **trolley motor** is located on the **jib**.
- The crane operator either sits in a **cabin** at the top of the tower or controls the crane by radio remote control from the ground.

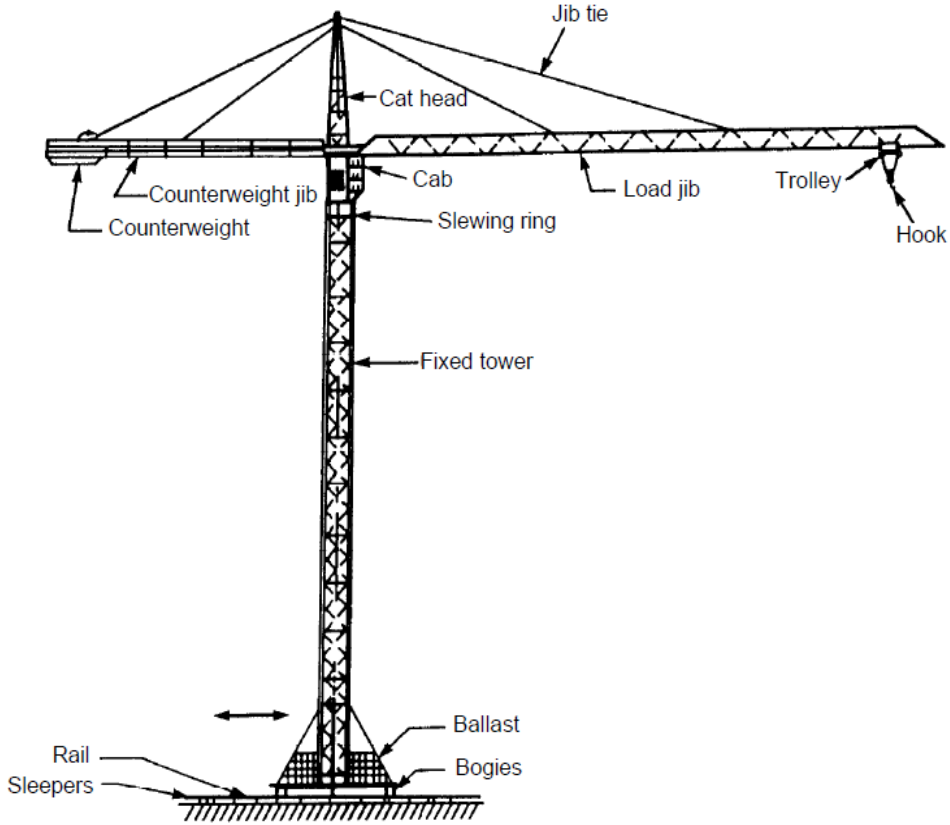

Tower Cranes

- The **lifting hook** is operated by using **electric motors** to manipulate wire rope cables.
- Crane operator usually works in conjunction with a signaller (‘**rigger**’ or ‘swamper’).
- They are most often in **radio contact**, and **always use hand signals**.

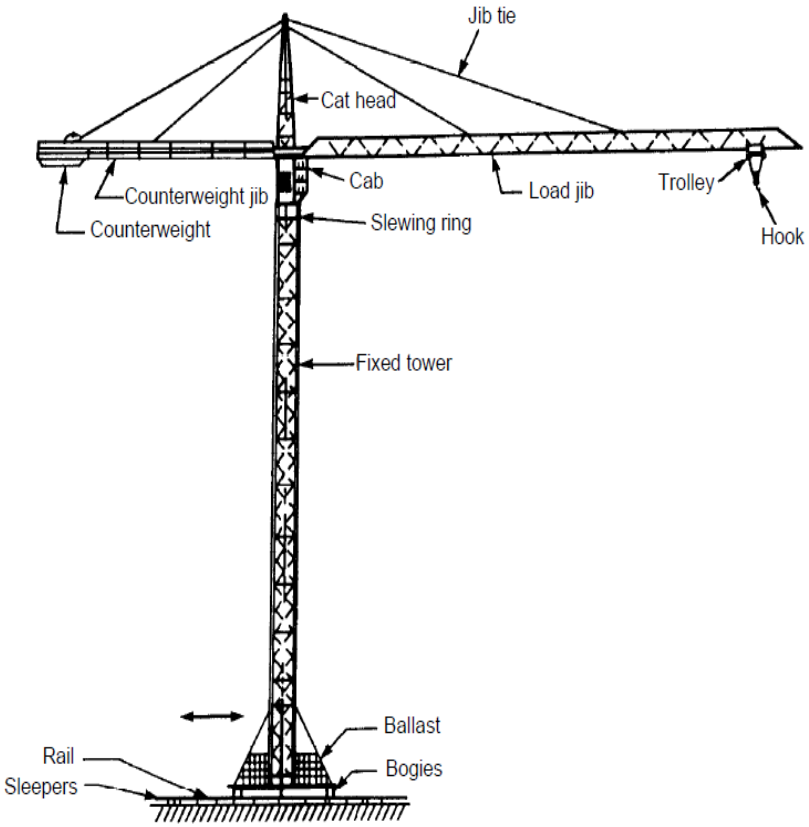

Tower Cranes

- The **rigger** directs the schedule of lifts for the crane.
- The **rigger** is responsible for the **safety** of the rigging and loads.

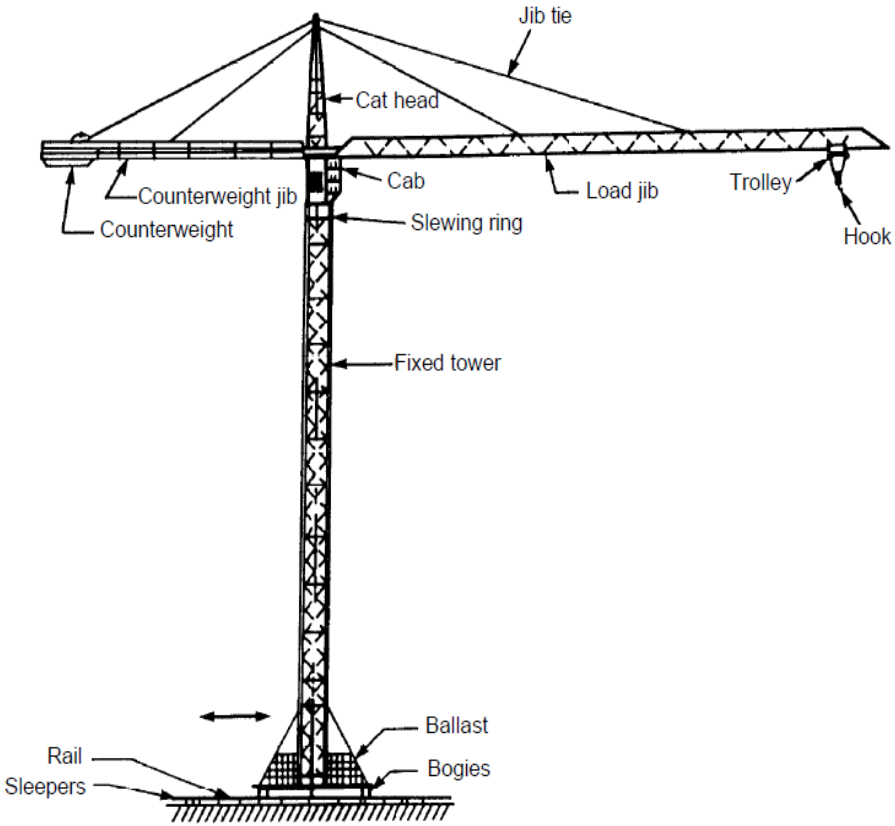

Tower Cranes

- A tower crane is usually assembled by **mobile crane** of greater reach or **self erected**.
- It is often claimed that a large fraction of the tower cranes in the world are in use in **Dubai**.

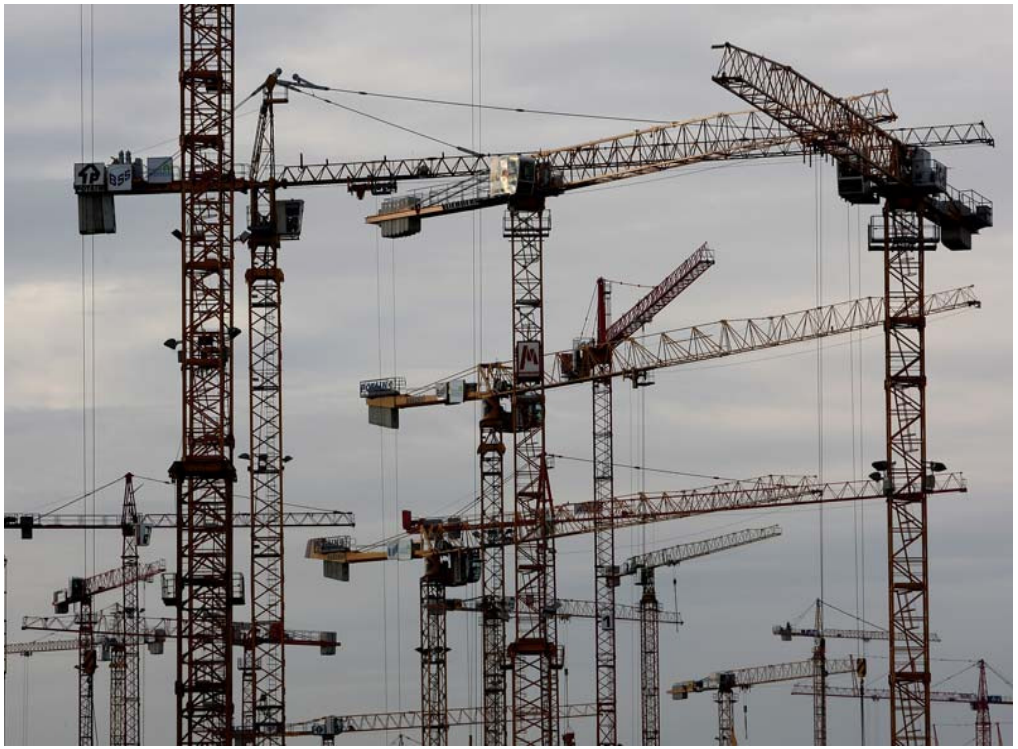

Tower Cranes

- Types of tower cranes by **boom shape** include:
- ***Horizontal jib*** cranes,
- ***Luffing boom*** cranes,
- ***Articulated jib*** cranes.

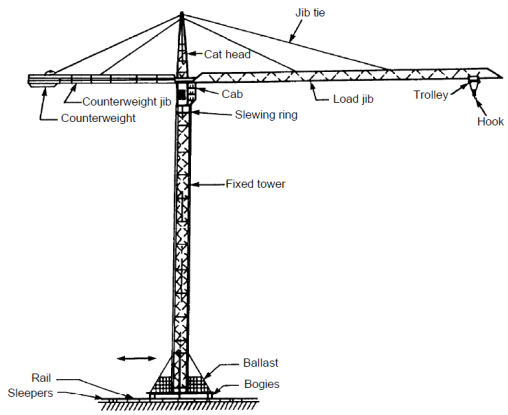

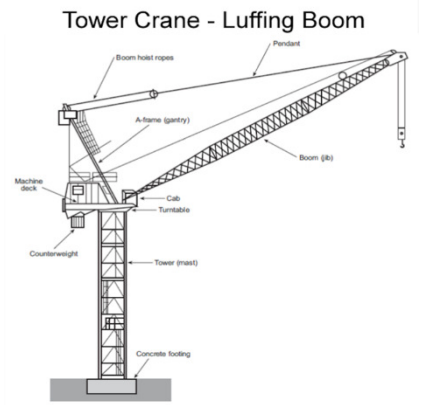

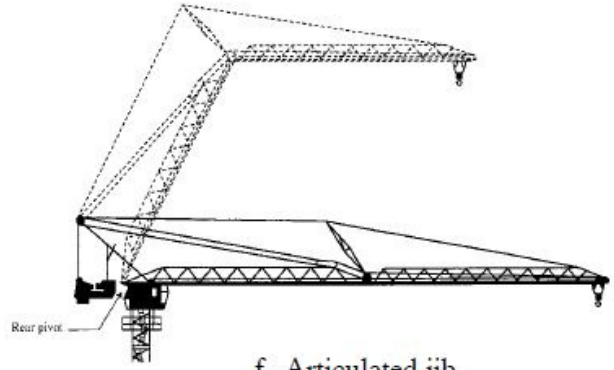

f. Articulated jib

Tower Cranes

- The majority of tower cranes are of the **horizontal jib** type.

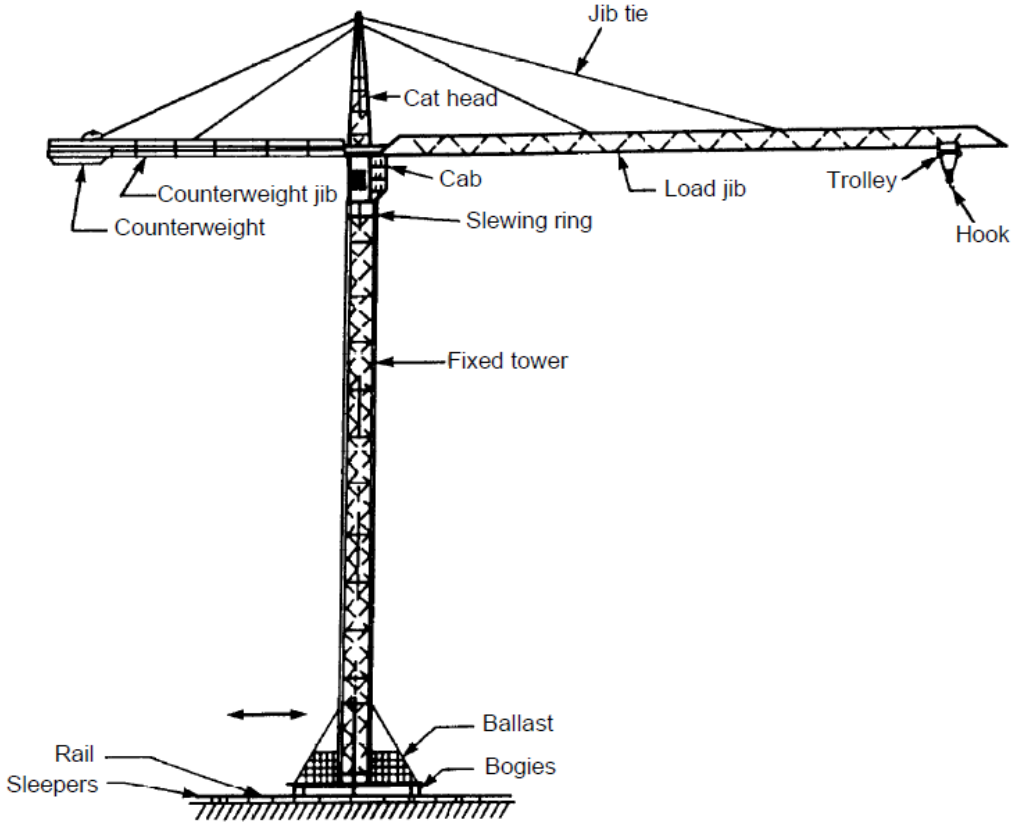

Tower Cranes

- **Luffing boom** (inclined boom) models have the ability to operate in areas of **restricted horizontal clearance** not suitable for horizontal jib cranes with their fixed jibs and counterweights.

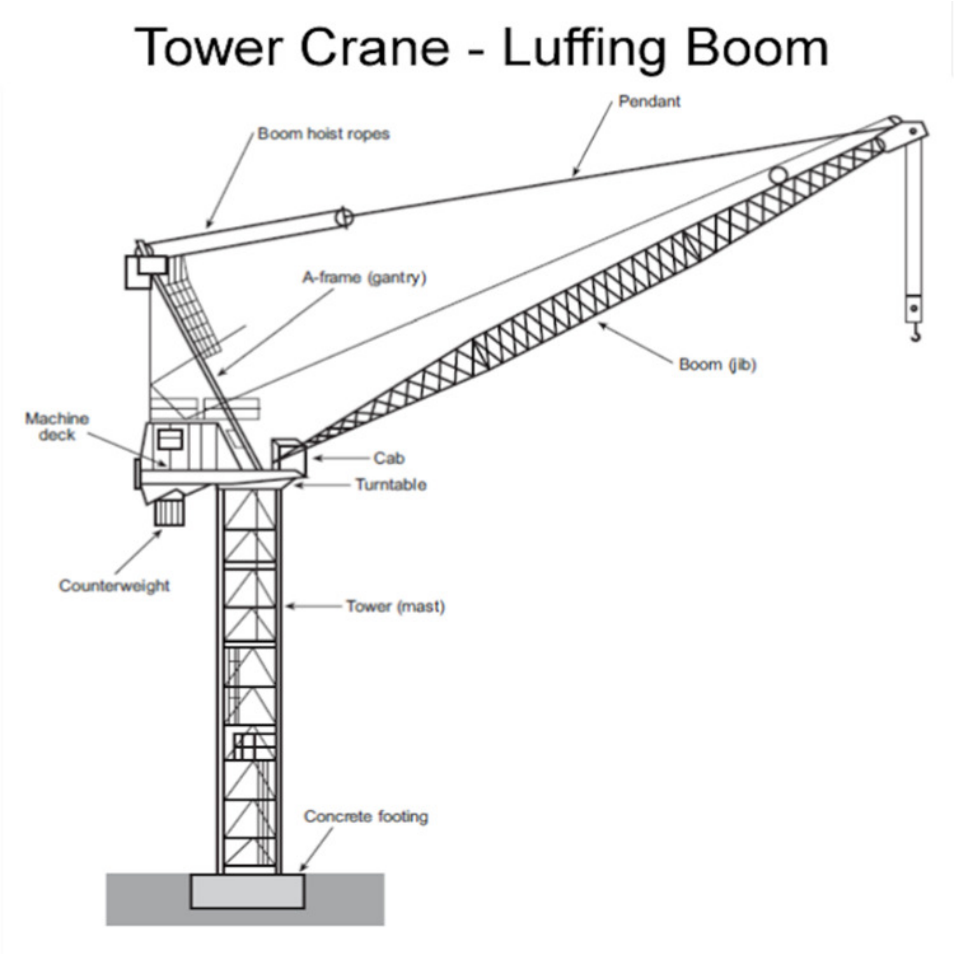

Tower Cranes

- **Articulated jib** cranes are able to reposition their hinged jibs to convert excess **hook reach** into added **hook height**.
- Can be operated in horizontal or luffed position.

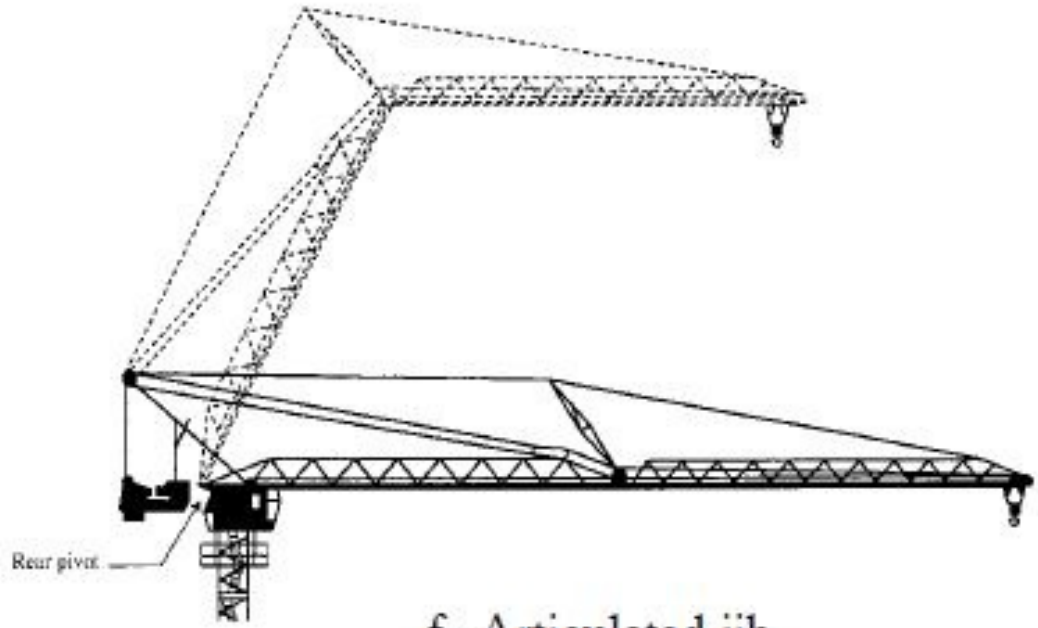

f. Articulated jib

Tower Cranes

- Types of tower crane by **method of mounting** include:
  - **static** (fixed mount) tower cranes,
  - **rail-mounted** tower cranes,
  - **mobile** tower cranes,
  - **climbing** cranes.



Tower Cranes

- **Climbing cranes** are supported by completed building floors
- Most tower cranes can raise themselves **section by section** from **floor to floor** as the building is erected until the tower reaches the desired height.

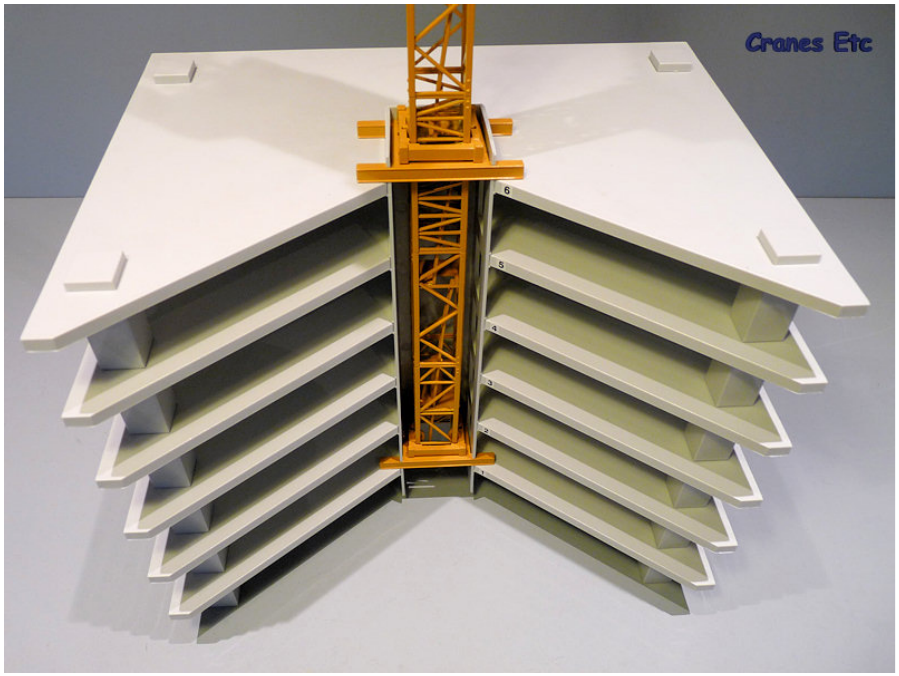

Tower Cranes

- Tower crane capacity depends on the operating radius, amount of counterweight, and mounting used.
- The **lifting capacity** of a representative horizontal jib tower crane as in **Table 3–10**.

Table 3–10 Maximum capacity vs. lift radius for a tower crane [pounds (kilograms)]

Lift Radius ft (m)	Boom Length (maximum hook radius)—ft (m)					
	260 (79.2)	*230 (70.1)*	*200 (61.0)*	*170 (51.8)*	*140 (42.7)*	*110 (33.5)*
110 (33.5)	21564 (9781)	23607 (10708)	28458 (12908)	34857 (15811)	39680 (18000)	39680 (18000)
120 (36.6)	19584 (8883)	21465 (9737)	25938 (11765)	31842 (14444)	38097 (17281)	
130 (39.6)	17802 (8075)	19548 (8867)	23652 (10729)	29124 (13211)	34920 (15840)	
140 (42.7)	16380 (7430)	18018 (8173)	21861 (9916)	26982 (12239)		
150 (45.7)	15057 (6830)	16596 (7528)	20196 (9161)	24984 (11333)		
160 (48.8)	13699 (6214)	15143 (6869)	18534 (8407)	24705 (11206)		
170 (51.8)	12654 (5740)	14012 (6356)	17214 (7808)	23037 (10450)		
180 (54.9)	11818 (5361)	13119 (5951)	16160 (7330)			
190 (57.9)	10468 (4748)	11666 (5292)	14450 (6555)			
200 (61.0)	9700 (4400)	10811 (4904)	12440 (5643)			
210 (64.0)	9092 (4124)	10156 (4607)				
220 (67.1)	8208 (3723)	9215 (4180)				
260 (79.2)	7334 (3327)					

Minimum lift radius = 12.0 ft (3.6 m)

Tower Cranes

- The weight of the **hook block** has been incorporated into Table.
- The weight of all **other load handling devices** must be included in the calculated weight of the load.

Table 3–10 Maximum capacity vs. lift radius for a tower crane [pounds (kilograms)]

Lift Radius ft (m)	Boom Length (maximum hook radius)—ft (m)					
	260 (79.2)	*230 (70.1)*	*200 (61.0)*	*170 (51.8)*	*140 (42.7)*	*110 (33.5)*
110 (33.5)	21564 (9781)	23607 (10708)	28458 (12908)	34857 (15811)	39680 (18000)	39680 (18000)
120 (36.6)	19584 (8883)	21465 (9737)	25938 (11765)	31842 (14444)	38097 (17281)	
130 (39.6)	17802 (8075)	19548 (8867)	23652 (10729)	29124 (13211)	34920 (15840)	
140 (42.7)	16380 (7430)	18018 (8173)	21861 (9916)	26982 (12239)		
150 (45.7)	15057 (6830)	16596 (7528)	20196 (9161)	24984 (11333)		
160 (48.8)	13699 (6214)	15143 (6869)	18534 (8407)	24705 (11206)		
170 (51.8)	12654 (5740)	14012 (6356)	17214 (7808)	23037 (10450)		
180 (54.9)	11818 (5361)	13119 (5951)	16160 (7330)			
190 (57.9)	10468 (4748)	11666 (5292)	14450 (6555)			
200 (61.0)	9700 (4400)	10811 (4904)	12440 (5643)			
210 (64.0)	9092 (4124)	10156 (4607)				
220 (67.1)	8208 (3723)	9215 (4180)				
260 (79.2)	7334 (3327)					

Minimum lift radius = 12.0 ft (3.6 m)

Job Management
Crane Attachments

- Attachments in **Figure 3–31** are available to assist the crane in performing construction tasks.

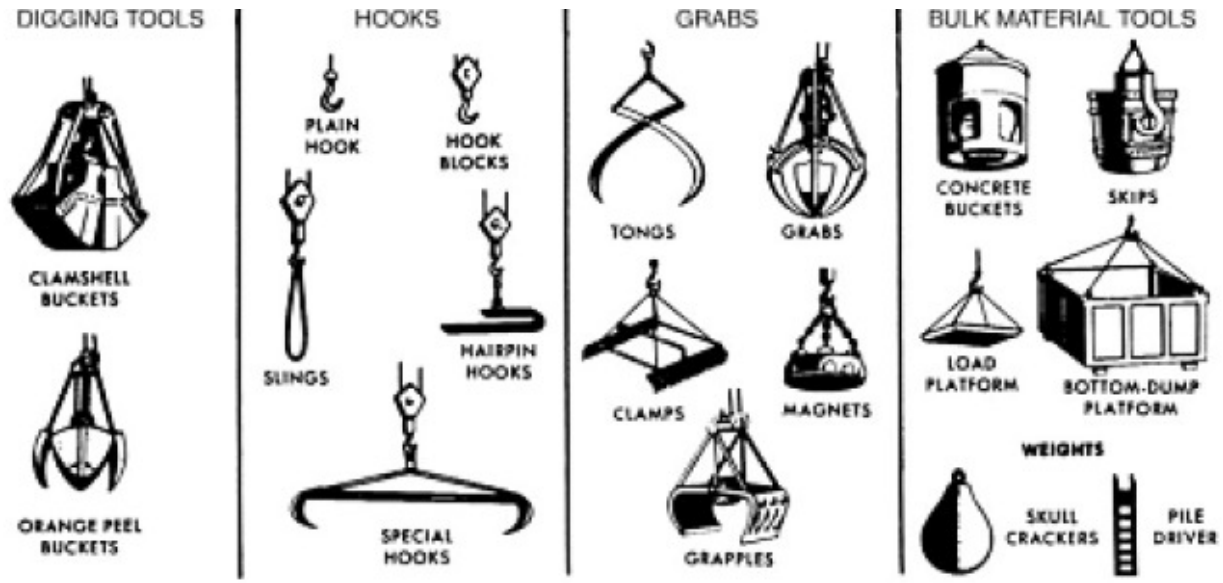

Figure 3–31 Crane boom attachments. [Permission to reproduce this material has been granted by the Power Crane & Shovel Assn. (PCSA), a bureau of the Construction Industry Manufacturers Assn. (CIMA). Neither PCSA nor CIMA can assume responsibility for the accuracy of the reproduction.]

Job Management
Crane Attachments

Orange peel bucket

Concrete bucket

Job Management
Crane Attachments

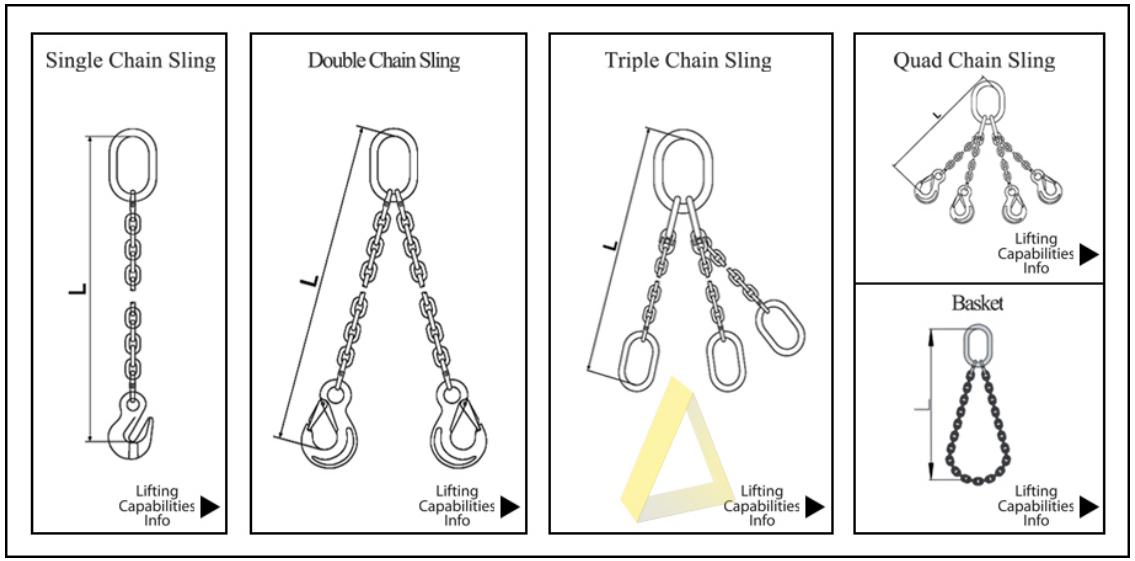

Slings and special hooks

Job Management
Crane Attachments

Grabs

Clam shell bucket

Job Management
Crane Attachments

Grapples

Magnates

Job Management
Crane Attachments

Skips

Loading Platform

Job Management
Crane Attachments

- **Pile driver**, a **drop hammer**, uses a similar action to drive piles.
- The hammer is hoisted and then dropped onto the pile cap to hammer the pile into the soil.

drop hammer

Job Management
Crane Attachments

- The **skull cracker** (**wrecking ball**) is a heavy weight that is hoisted by the crane and then swung or allowed to drop free to perform like a huge sledge hammer.
- It is used to break up pavement and for demolition work.

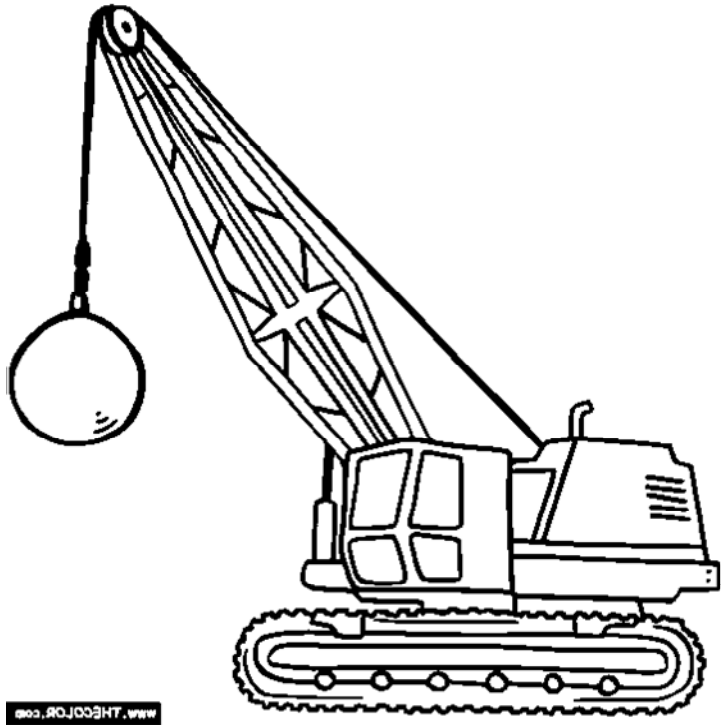

wrecking ball

Job Management
Crane safety

- **High-voltage lines** present a major **safety hazard** to crane operations.
- U.S. Occupational Safety and Health Act (OSHA) regulations prohibit a crane or its load from approaching closer than **10 ft (3 m)** to a high-voltage line carrying **50 kV** or less.
- An additional **0.4 in. (1 cm)** must be added for each kilovolt over 50 kV.

Job Management
Crane safety

- **Crane accidents** occur all too frequently in construction work, particularly when **lifting near-capacity loads** and when operating with **long booms**.
- Some suggestions for **safe crane operations** include the following:

Job Management
Safe crane operations

- Carefully set **outriggers** on firm supports.

Job Management
safe crane operations

- The crane base must be level. Safe crane capacity is reduced as much as 50% when the crane is out of level by only **3°** and operating with a long boom at minimum radius.

Job Management
safe crane operations

- Use a **communications system** or **hand signals** when the crane operator cannot see the load at all times.
- Make sure that all **workers** involved in the operation **know** the **hand signals** to be used.

Job Management
safe crane operations

- Provide ***tag lines*** (restraining lines) when there is any danger caused by **swinging loads**.

Job Management
safe crane operations

- Ensure that crane operators are **well trained** and know the capability of their machines.

Job Management
safe crane operations

- Check **safe-lifting-capacity charts** for the entire range of planned swing before starting a lift.
- Use a load indicator if possible.

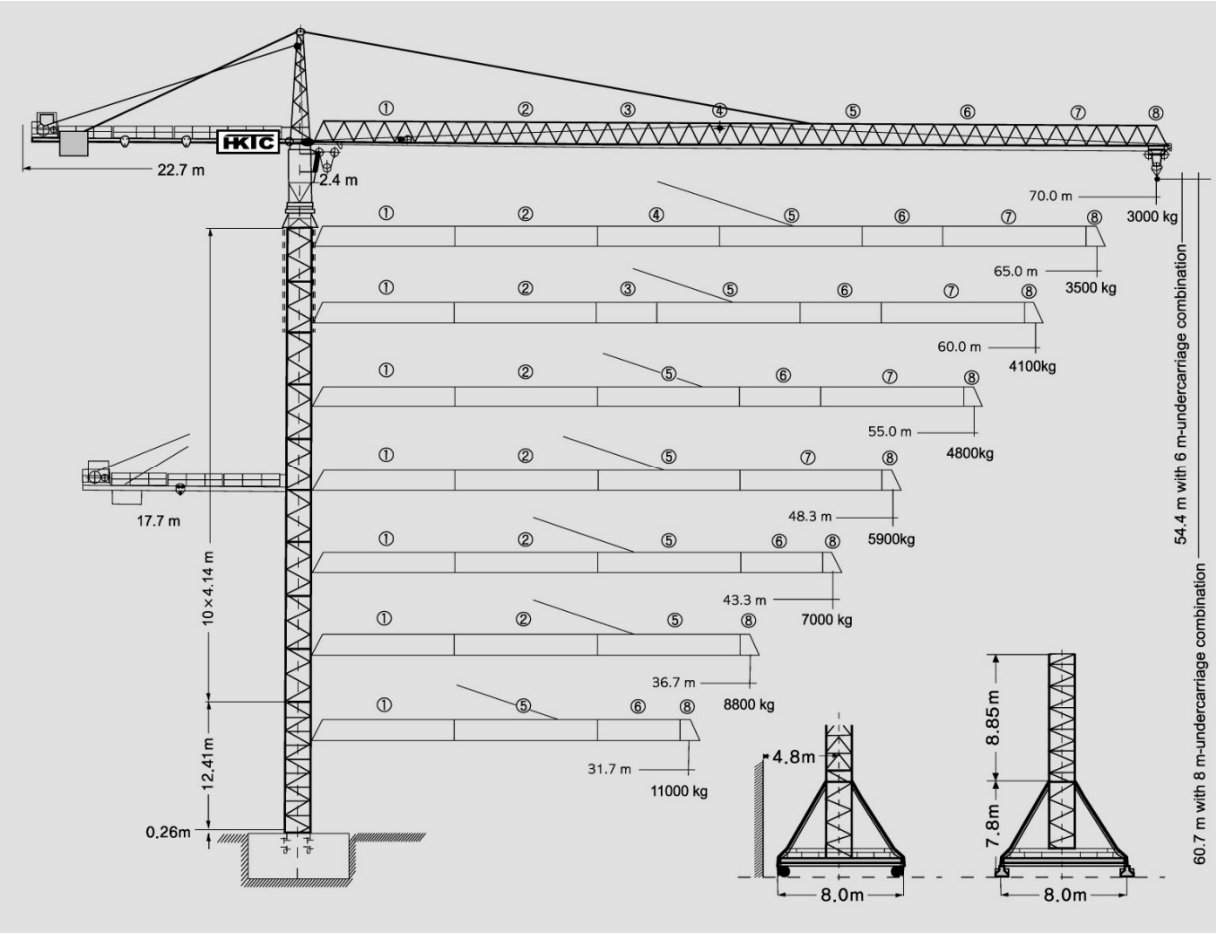

Example 1

- The tower crane whose capacity chart is shown in Table 3–10 is equipped with a **260 ft (79.2-m) boom**. The crane is preparing to lift a **load weighing 10,000 lb (4536 kg)**. The weight of slings and the spreader bar to be used is **1200 lb** (544 kg).
- What is the maximum safe lift **radius** for this load?

Example 1

- From Table 3-10, and for 260 ft boom length and lift load weighing 10,000 lb.
- Total Weight = 10000+1200 = 11200 lb
- Lift radius ranges between 180 -190 ft.
- Maximum safe lift radius = 180 + (190-180) * (11,818-11,200)/(11,818-10,468) = **184.5 ft**

Table 3–10 Maximum capacity vs. lift radius for a tower crane [pounds (kilograms)]

Lift Radius ft (m)	Boom Length (maximum hook radius)—ft (m)					
	260 (79.2)	*230 (70.1)*	*200 (61.0)*	*170 (51.8)*	*140 (42.7)*	*110 (33.5)*
110 (33.5)	21564 (9781)	23607 (10708)	28458 (12908)	34857 (15811)	39680 (18000)	39680 (18000)
120 (36.6)	19584 (8883)	21465 (9737)	25938 (11765)	31842 (14444)	38097 (17281)	
130 (39.6)	17802 (8075)	19548 (8867)	23652 (10729)	29124 (13211)	34920 (15840)	
140 (42.7)	16380 (7430)	18018 (8173)	21861 (9916)	26982 (12239)		
150 (45.7)	15057 (6830)	16596 (7528)	20196 (9161)	24984 (11333)		
160 (48.8)	13699 (6214)	15143 (6869)	18534 (8407)	24705 (11206)		
170 (51.8)	12654 (5740)	14012 (6356)	17214 (7808)	23037 (10450)		
180 (54.9)	11818 (5361)	13119 (5951)	16160 (7330)			
190 (57.9)	10468 (4748)	11666 (5292)	14450 (6555)			
200 (61.0)	9700 (4400)	10811 (4904)	12440 (5643)			
210 (64.0)	9092 (4124)	10156 (4607)				
220 (67.1)	8208 (3723)	9215 (4180)				
260 (79.2)	7334 (3327)					

Minimum lift radius = 12.0 ft (3.6 m)

Questions

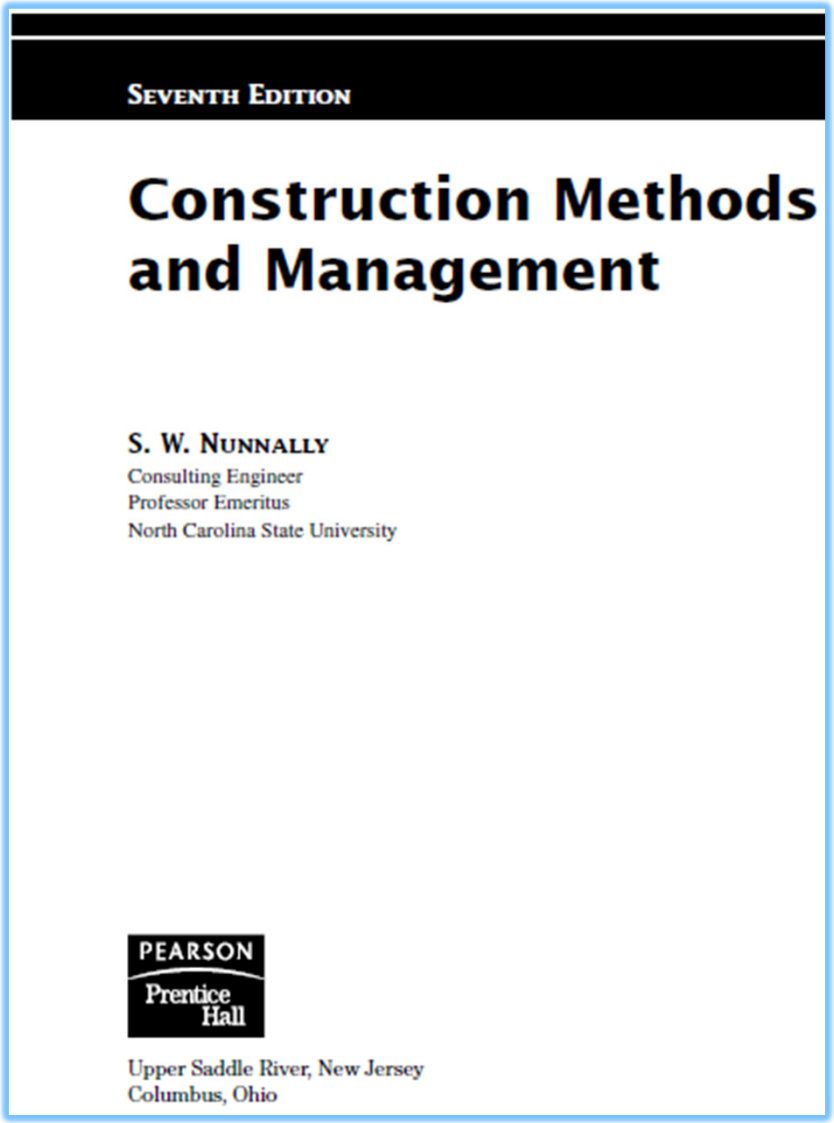

SEVENTH EDITION

Construction Methods and Management

S. W. NUNNALLY
Consulting Engineer
Professor Emeritus
North Carolina State University

PEARSON
Prentice Hall

Upper Saddle River, New Jersey
Columbus, Ohio