Arab Academy for Science, Technology & Maritime Transport
Colleague of Engineering & Technology
Construction & Building Engineering

CB 523
Methods and Equipment for Construction 1

Lecture 6&7:
Construction Concrete

Instructor: Dr. Ahmed Elyamany

Courtesy of Dr. Ahmed Alhakeem & Dr. Ahmed Alhady

Agenda

- Construction of Concrete
  - Production Of Concrete
    - Types of Concrete
    - Concrete Components
    - Mix Design
    - Batching and Mixing
    - Estimating Mixer Production
  - Concrete Construction Practices
  - Construction Applications Of Concrete

Production Of Concrete

- Concrete is produced by mixing Portland cement, aggregate, and water.
- In addition, a fourth component, an additive, may be added to improve the workability or other properties of the concrete mix.
- The construction operations involved in the production of concrete include batching, mixing, transporting, placing, finishing, consolidating, and curing.
- To meet design requirements while facilitating construction, it is important that concrete possess certain properties.
- Hardened concrete must meet design strength requirements and be uniform, watertight, durable, and wear-resistant.
- Desirable properties of plastic concrete include workability and economy.
- All of these properties are influenced by the concrete components and mix design used as well as by the construction techniques employed.

Production Of Concrete

Types of Concrete

- **CONCRETE** is classified into several categories according to its application and density.

- ***Normal-weight concrete***

✓usually weighs from 140 to 160 lb/cu ft (2243–2563 kg/m3), depending on the mix design and type of aggregate used.

✓A unit weight of 150 lb/cu ft (2403 kg/m3) is usually assumed for design purposes.

✓Typical 28-day compressive strength ranges from 2000 to 4000 psi (13,790–27,580 kPa).

Production Of Concrete

Types of Concrete

- ***Structural lightweight concrete***
- has a unit weight less than 120 lb/cu ft (1922 kg/m3)
- with a 28-day compressive strength greater than 2500 lb/sq in. (17,237 kPa).
- Its light weight is obtained by using lightweight aggregates such as expanded shale, clay, slate, and slag.

Production Of Concrete

Types of Concrete

- ***Lightweight insulating concrete***

✓may weigh from 15 to 90 lb/cu ft (240–1442 kg/m3)

✓have a 28-day compressive strength from about 100 to 1000 lb/sq in. (690–6895 kPa).

✓As the name implies, such concrete is primarily utilized for its thermal insulating properties.

✓Aggregates frequently used for such concrete include perlite and vermiculite.

✓In some cases, air voids introduced into the concrete mix or foam replace some or all of the aggregate particles.

Production Of Concrete

Types of Concrete

- *Mass concrete*
- is concrete used in a structure such as a dam in which the weight of the concrete provides most of the strength of the structure.
- Thus, little or no reinforcing steel is used.
- Its unit weight is usually similar to that of regular concrete.

Production Of Concrete

Types of Concrete

- *Heavyweight*
- is concrete made with heavy aggregates such as barite, magnetite, and steel punchings;
- it is used primarily for nuclear radiation shielding.
- Unit weights may range from 180 to about 400 lb/cu ft (2884–6408 kg/m3).

Production Of Concrete

Types of Concrete

- *No-slump concrete*
- is concrete having a slump of 1 in. (2.5 cm) or less.
- *Slump is a measure of concrete consistency obtained by placing concrete into a test cone following a standard test procedure (ASTM C143) and measuring the decrease in height (slump) of the sample when the cone is removed.*
- Applications of no- slump concrete include bedding for pipelines and concrete placed on *inclined surfaces.*

Production Of Concrete

Types of Concrete

- *Refractory concrete*
- is concrete that is suitable for high- temperature applications such as boilers and furnaces.
- The maximum allowable temperature for refractory concrete depends on the type of refractory aggregate used.

Production Of Concrete

Types of Concrete

- *Precast concrete*
- is concrete that has been cast into the desired shape prior to placement in a structure.

Production Of Concrete

Types of Concrete

- *Architectural concrete*
- is concrete that will be exposed to view and therefore utilizes special shapes, designs, or surface finishes to achieve the desired architectural effect.
- White or colored cement may be used in these applications. Surface textures may include exposed aggregates, raised patterns etc.
- Architectural concrete panels are often precast and used for curtain walls and screens.

Production Of Concrete

Concrete Components

- The essential components of concrete are Portland cement, aggregate, and water.

- Another component, an admixture or additive, is often added to impart certain desirable properties to the concrete mix.

Production Of Concrete

Concrete Components

CEMENT

There are five principal types of Portland cement, classified by the American Society for Testing and Materials (ASTM) as Types I–V, used in construction.

- *Type I (normal) Portland cem*ent is a general-purpose cement suitable for all normal applications.

- *Type II (modified) Portland cement* provides better resistance to alkali attack and produces less heat of hydration than does Type I cement. It is suitable for use in structures such as large piers and drainage systems, where groundwater contains a moderate level of sulfate.

Production Of Concrete

Concrete Components

CEMENT

- *Type III (high early strength) cement* provides 190% of Type I strength after 1 day of curing. It also produces about 150% of the heat of hydration of normal cement during the first 7 days. It is used to permit early removal of forms and in cold-weather concreting.

Production Of Concrete

Concrete Components

CEMENT

- *Type IV (low heat) cement* produces only 40–60% of the heat produced by Type I cement during the first 7 days. However, its strength is only 55% of that of normal cement after 7 days. It is produced for use in massive structures such as dams.

- *Type V (sulfate-resistant) cement* provides maximum resistance to alkali attack. However, its 7-day strength is only 75% of normal cement. It should be used where the concrete will be in contact with soil or water that contains a high sulfate concentration.

Production Of Concrete

Concrete Components

AGGREGATES

- Aggregate is used in concrete to reduce the cost of the mix and to reduce shrinkage.
- Because aggregates make up 60–80% of concrete volume, their properties strongly influence the properties of the finished concrete.
- To produce quality concrete, each aggregate particle must be completely coated with cement paste and paste must fill all void spaces between aggregate particles.
- The quantity of cement paste required is reduced if the aggregate particle sizes are well distributed and the aggregate particles are rounded or cubical.
- Aggregates must be strong, resistant to freezing and thawing, chemically stable, and free of fine material that would affect the bonding of the cement paste to the aggregate."

Production Of Concrete

Concrete Components

WATER

Water is required in the concrete mix for several purposes.

- Principal among these is to provide the moisture required for hydration of the cement to take place.
- *Hydration is the chemical reaction between cement and water which produces hardened cement. The heat that is produced by this reaction is referred to as heat of hydration.*
- If aggregates are not in a saturated, surface-dry (SSD) condition when added to a concrete mix, they will either add or subtract water from the mix.
- Methods for correcting the amount of water added to a concrete batch to compensate for aggregate moisture are introduced hereinafter.
- The amount of water in a mix also affects the plasticity or workability of the plastic concrete.

Production Of Concrete

Concrete Components

WATER

- It has been found that the strength, water tightness, durability, and wear resistance of concrete are related to the water/cement ratio of the concrete mix.
- The lower the water/cement ratio, the higher the concrete strength and durability, provided that the mix has adequate workability.
- Thus, the water/cement ratio is selected by the mix designer to meet the requirements of the hardened concrete.
- *Water/cement ratios* normally used range from about 0.40 to 0.70 by weight.
- In terms of water quality, almost any water suitable for drinking will be satisfactory as mix water.
- Organic material in mix water tends to prevent the cement paste from bonding properly to aggregate surfaces. Alkalies or acids in mix water may react with the cement and interfere with hydration.

Production Of Concrete

Concrete Components

WATER

- Sea-water may be used for mixing concrete, but its use will usually result in concrete compressive strengths 10–20% lower than normal. The use of a lower water/cement ratio can compensate for this strength reduction.

- However, seawater should not be used for reinforced concrete where the steel will be in contact with the concrete.

- When water quality is in doubt, it is recommended that trial mixes be tested for setting time and 28-day strength.

Production Of Concrete

Concrete Components

ADDITIVES

- A number of types of additives or admixtures are used in concrete. Some of the principal types of additives used are air-entraining agents, water-reducing agents, retarders, accelerators, pozzolans, and workability agents.
- Air-entrained concrete has significantly increased resistance to freezing and thawing as well as to scaling caused by the use of deicing chemicals.
- Entrained air also increases the workability of plastic concrete and the water tightness of hardened concrete. For these reasons, air-entrained concrete is widely used for pavements and other structures exposed to freezing and thawing.

Production Of Concrete

Concrete Components

ADDITIVES

- Water-reducing agents increase the slump or workability of a concrete mix. Thus, with a water-reducing agent the amount of water in the mix may be reduced without changing the concrete's consistency.
- However, note that some water-reducing agents also act as retarders. Retarders slow the rate of hardening of concrete.
- Retarders are often used to offset the effect of high temperatures on setting time. They are also used to delay the setting of concrete when pumping concrete over long distances.

Production Of Concrete

Concrete Components

ADDITIVES

- Accelerators act in the opposite manner to retarders. That is, they decrease setting time and increase the early strength of concrete. Since the most common accelerator, calcium chloride, is corrosive to metal, it should not be used in concrete with embedded steel, aluminum, or galvanized steel.
- **Pozzolans** are finely divided materials, such as **fly ash**, **volcanic ash**, and **calcined shale**, which are used to replace some of the cement in a concrete mix.
- Pozzolans are used to reduce the heat of hydration, increase the workability, and reduce the segregation of a mix.
- **Workability agents** or plasticizers increase the workability of a mix. However, air-entraining agents, water-reducing agents, pozzolans, and retarders will also increase the workability of a mix.

Production Of Concrete

Mix Design

- The concrete mix designer is faced with the problem of selecting the most economical concrete mix that meets the requirements of the hardened concrete while providing acceptable workability.
- The most economical mix will usually be the mix that uses the highest ratio of aggregate to cement while providing acceptable workability at the required water/cement ratio.
- A suggested mix design procedure is to **first** select a water/cement ratio that satisfies requirements for concrete strength, durability, and water tightness.
- (Table 7-4 gives **maximum water/cement ratios** recommended by the American Concrete Institute for various applications.)

Production Of Concrete

Mix Design

Table 7–4 Maximum water-cementitious material ratios and minimum design strengths for various exposure conditions (Courtesy of Portland Cement Association)

Exposure condition	Maximum water-cementitious material ratio by mass for concrete	Minimum design compressive strength f'_c, MPa (psi)
Concrete protected from exposure to freezing and thawing, application of deicing chemicals, or aggressive substances	Select water-cementitious material ratio on basis of strength, workability, and finishing needs	Select strength based on structural requirements
Concrete intended to have low permeability when exposed to water	0.50	28 (4000)
Concrete exposed to freezing and thawing in a moist condition or deicers	0.45	31 (4500)
For corrosion protection for reinforced concrete exposed to chlorides from deicing salts, salt water, brackish water, seawater, or spray from these sources	0.40	35 (5000)

Adapted from ACI 318 (1999).

Production Of Concrete

Mix Design

- **Next**, select the workability or slump required (see Table 7-5).
- **The third step** is to mix a trial batch using a convenient quantity of cement at the selected water/cement ratio. Quantities of saturated, surface-dry fine, and coarse aggregate are then added until the desired slump is obtained.
- After weighing each trial mix component, the yield of the mix and the amount of each component required for a full-scale batch may be calculated by the method to be described hereinafter.

Production Of Concrete

Mix Design

Table 7-5 Recommended slumps for various types of construction (Courtesy of Portland Cement Association)

Concrete construction	Slump, mm (in.)	
	Maximum*	Minimum
Reinforced foundation walls and footings	75 (3)	25 (1)
Plain footings, caissons, and substructure walls	75 (3)	25 (1)
Beams and reinforced walls	100 (4)	25 (1)
Building columns	100 (4)	25 (1)
Pavements and slabs	75 (3)	25 (1)
Mass concrete	75 (3)	25 (1)

*Many be increased 25 mm (1 in.) for consolidation by hand methods, such as rodding and spading.
Plasticizers can safely provide higher slumps.
Adapted from ACI 211.1

Production Of Concrete

Batching and Mixing

- The process of proportioning cement, water, aggregates, and additives prior to mixing concrete is called batching.
- Since concrete specifications commonly require a batching accuracy of 1–3%, depending on the mix component, materials should be carefully proportioned by weight.
- Central batching plants that consist of separate aggregate and cement batching units are often used for servicing truck mixers and for feeding central mixing plants. *In such batching plants cement is usually handled in bulk. The addition of water to the mix may be controlled by the batching plant or it may be accomplished by the mixer operator.*
- Batching for small construction mixers is accomplished by loading the required quantity of cement and aggregate directly into the skip (hopper) of the mixer. Water is added by the mixer operator. Cement for such mixers is usually measured by the sack (94 lb or 42.6 kg).

Production Of Concrete

Batching and Mixing

- A standard classification system consisting of a number followed by a letter is used in the United States to identify mixer type and capacity. In this system, the number indicates the rated capacity of the mixer in cubic feet (0.028 m3) of plastic concrete.
- *Satisfactory mixing should be obtained as long as the volume of the mix does not exceed the mixer's rated capacity by more than 10%.*
- *The letter in the rating symbol indicates the mixer type:*
  - *S is a construction mixer,*
  - *E is a paving mixer, and*
  - *M is a mortar mixer.*
- *Thus, the symbol "34E" indicates a 34-cu ft (0.96-m3) paving mixer, "16S" indicates a 16-cu ft (0.45-m3) construction mixer, and so on.*

Production Of Concrete

Batching and Mixing

- Construction mixers are available as wheel-mounted units, trailer-mounted units, portable plants, and stationary plants.
- The wheel-mounted 16-cu ft (type 16S) construction mixer is often used on small construction projects where ready-mixed concrete is not available.
- Large central mix plants are used to supply concrete for projects such as dams, which require large quantities of concrete.

Production Of Concrete

Batching and Mixing

- Truck mixers or transit mix trucks (Figure 7-8) are truck-mounted concrete mixers capable of mixing and transporting concrete. The product they deliver is referred to as ready-mixed concrete.
- The usual procedure is to charge the truck mixer with aggregate, additives, and cement at a central batch plant, then add water to the mix when ready to begin mixing.

Production Of Concrete

Batching and Mixing

FIGURE 7-8. Truck mixer. (Courtesy of Kenworth Truck Company)

Production Of Concrete

Batching and Mixing

- *Truck mixers are also capable of operating as agitator trucks for transporting plastic concrete from a central mix plant.*
- *A truck mixer used as an agitator truck can haul a larger quantity of concrete than it is capable of mixing. While a unit's capacity when used as an agitator truck is established by the equipment manufacturer, agitating capacity is generally about one-third greater than mixer capacity. Standard truck mixer capacity ranges from 6 cu yd (4.6 m3) to over 15 cu yd (11.5 m3).*
- Concrete in truck mixers should be discharged within 1.5h after the start of mixing.

Production Of Concrete

Batching and Mixing

- **Paving mixers**
- Paving mixers are self-propelled concrete mixers especially designed for concrete paving operations. They are equipped with a boom and bucket which enable them to place concrete at any desired point within the roadway.
- With the increasing use of slipform pavers, paving mixers are now most often used to supply slipform pavers or to operate as stationary mixers.

Production Of Concrete

Batching and Mixing

- **Paving mixers**
- A minimum mixing time of 1 min plus 1⁄4 min for each cubic yard (0.76 m3) over 1 cu yd (0.76 m3) is often specified for concrete mixers. However, the time required for a complete mixer cycle has been found to average 2–3 min.
- Timing of the mixing cycle should not begin until all solid materials are placed into the drum. All water should be added before one-fourth of the mixing time has passed.

Production Of Concrete

Estimating Mixer Production

- After a concrete mix design has been established, the volume of plastic concrete produced by the mix may be calculated by the absolute-volume method. In this method the volume of one batch is calculated by summing up the absolute volume of all mix components. The absolute volume of each component may be found as follows:

$$\text{Volume (cu ft)} = \frac{\text{Weight (lb)}}{62.4 \times \text{specific gravity}} \qquad (7\text{–}1A)$$

$$\text{Volume (m}^3\text{)} = \frac{\text{Weight (kg)}}{1000 \times \text{specific gravity}} \qquad (7\text{–}1B)$$

- When calculating the absolute volume of aggregate using Equation 7–1, aggregate weight must be based on the saturated, surface-dry (SSD) condition. Such aggregate will neither add nor subtract water from the mix. If aggregate contains free water, a correction must be made in the quantity of water to be added to the mix. Example 7–3 illustrates these procedures.

Specific gravity is defined as the ratio between the weight of a given volume of a material and weight of an equal volume of water.

Production Of Concrete

Estimating Mixer Production

- **EXAMPLE 7–3**

(a) Calculate the volume of plastic concrete that will be produced by the mix design given in the table.

Component	Specific Gravity	Quantity	
		lb	*kg*
Cement	3.15	340	154
Sand (SSD)	2.65	940	426
Gravel (SSD)	2.66	1210	549
Water	1.00	210	95

(b) Determine the actual weight of each component to be added if the sand contains 5% excess moisture and the gravel contains 2% excess moisture.

(c) Determine the weight of each component required to make a three-bag mix and the mix volume.

Production Of Concrete

Estimating Mixer Production

- ***SOLUTION***

(a) Cement volume $= \dfrac{340}{3.15 \times 62.4} = 1.7$ cu ft

$$\left[= \frac{154}{3.15 \times 1000} = 0.05 \text{ m}^3 \right]$$

Sand volume $= \dfrac{940}{2.65 \times 62.4} = 5.7$ cu ft

$$\left[= \frac{426}{2.65 \times 1000} \; 0.16 \text{ m}^3 \right]$$

Gravel volume $= \dfrac{1210}{2.66 \times 62.4} = 7.3$

$$\left[= \frac{549}{2.66 \times 1000} = 0.21 \text{ m}^3 \right]$$

Water volume $= \dfrac{210}{1.00 \times 62.4} = 3.4$ cu ft

$$\left[= \frac{95}{1.00 \times 1000} = 0.09 \text{ m}^3 \right]$$

Mix volume $= 1.7 + 5.7 + 7.3 + 3.4 = 18.1$ cu ft

$$[\, = 0.05 + 0.16 + 0.21 + 0.09 = 0.51 \text{ m}^3]$$

Production Of Concrete

Estimating Mixer Production

(b) Excess water in sand $= 940 \times 0.05 = 47$ lb

$[= 426 \times 0.05 = 21 \text{ kg}]$

Excess water in gravel $= 1210 \times 0.02 = 24$ lb

$[= 549 \times 0.02 = 11 \text{ kg}]$

Total excess water $= 47 + 24 = 71$ lb

$[= 21 + 11 = 32 \text{ kg}]$

Field mix quantities:

Water $= 210 - 71 = 139$ lb

$[= 95 - 32 = 63 \text{ kg}]$

Sand $= 940 + 47 = 987$ lb

$[= 426 + 21 = 447 \text{ kg}]$

Gravel $= 1210 + 24 = 1234$ lb

$[= 549 + 11 = 560 \text{ kg}]$

Production Of Concrete

Estimating Mixer Production

(c) Adjusting to a three-bag mix:

$$\text{Cement} = 3 \times 94 = 282 \text{ lb}$$

$$[= 3 \times 42.6 = 127.8 \text{ kg}]$$

$$\text{Sand} = \frac{282}{340} \times 987 = 819 \text{ lb}$$

$$\left[= \frac{127.8}{154} \times 447 = 370 \text{ kg}\right]$$

$$\text{Gravel} = \frac{282}{340} \times 1234 = 1023 \text{ lb}$$

$$\left[= \frac{127.8}{154} \times 560 = 464 \text{ kg}\right]$$

$$\text{Water} = \frac{282}{340} \times 139 = 115 \text{ lb}$$

$$\left[= \frac{127.8}{154} \times 63 = 52 \text{ kg}\right]$$

$$\text{Mix volume} = \frac{282}{340} \times 18.1 = 15.0 \text{ cu ft}$$

$$\left[= \frac{127.8}{154} \times 0.51 = 0.42 \text{ m}^3\right]$$

Production Of Concrete

Estimating Mixer Production

After the batch volume has been calculated, mixer production may be estimated as follows:

$$\text{Mixer production (cu yd/h)} = \frac{2.22 \times V \times E}{T} \qquad \textbf{(7–2A)}$$

$$\text{Mixer production (m}^3\text{/h)} = \frac{60 \times V \times E}{T} \qquad \textbf{(7–2B)}$$

where V = batch volume (cu ft or m^3)
T = cycle time (min)
E = job efficiency

CONCRETE CONSTRUCTION PRACTICES

Transporting and Handling

- Concrete construction involves concrete ***batching, mixing,*** transporting, placing, consolidating, finishing, and curing.
- A number of different items of equipment are available for transporting concrete from the mixer to its place of use.
- Some equipment commonly used includes *transit mixer trucks, agitator trucks, dump trucks, conveyors, pumps, and cranes with concrete buckets.*
- Special rail cars designed for transporting plastic concrete are also available, but seldom used except on mass concrete projects such as concrete dams.

CONCRETE CONSTRUCTION PRACTICES

Transporting and Handling

- when handling plastic concrete.
- The height of any free fall should be limited to 5 ft (1.5 m) unless downpipes or ladders are used.
- When using non-agitator trucks for hauling concrete, specifications may limit the truck speed and maximum haul distance that may be used.
- Temperature, road condition, truck body type, and mix design are the major factors that influence the maximum safe hauling distance that may be used.

CONCRETE CONSTRUCTION PRACTICES

Transporting and Handling

- A number of different items of equipment are available for moving concrete from the mixer to its final position.

- Equipment commonly used includes wheelbarrows, buggies, chutes, conveyors, pumps, buckets, and trucks.

- However, these items of equipment are gradually being replaced by concrete pumps capable of moving concrete from a truck directly into final position up to heights of 500 ft (152 m) or more.

- Truck-mounted concrete pumps equipped with placement booms such as that shown in Figure 12-15 are widely used in building construction."

CONCRETE CONSTRUCTION PRACTICES

Transporting and Handling

FIGURE 12-15. Concrete pump and truck mixer. (Courtesy of Morgen Manufacturing Co.)

CONCRETE CONSTRUCTION PRACTICES

Placing and Consolidating

- The movement of plastic concrete into its final position (usually within forms) is called placing.
- Before placing concrete, the underlying surface and the interior of all concrete forms must be properly prepared.
- When placing fresh concrete on top of hardened concrete, the surface of the hardened concrete should be roughened to provide an adequate bond between the two concrete layers.
- To improve bonding between the layers, the surface of the hardened concrete should also be coated with grout or a layer of mortar before the fresh concrete is placed.
- Concrete is usually placed in layers 6–24 in. (15–61 cm) thick except when pumping into the bottom of forms. When placing concrete in layers, *care must be taken to ensure that the lower layer does not take its initial set before the next layer is poured."*

CONCRETE CONSTRUCTION PRACTICES

Placing and Consolidating

- Do not allow construction crews or transit mix operators to add additional water to the mix for the purpose of increasing the workability of the plastic concrete. If a more workable mix is needed, redesign the mix or add workability agent.

- Concrete may also be pneumatically placed by spraying it onto a surface. Since a relatively dry mix is used, shotcrete may be applied to overhead and vertical surfaces. As a result, shotcrete is often used for constructing tanks, swimming pools, and tunnel liners, as well as for repairing damaged concrete structures.

CONCRETE CONSTRUCTION PRACTICES

Placing and Consolidating

- Concrete may be placed underwater by the use of a tremie or by pumping.
- *A tremie is nothing more than a vertical tube with a gate at the bottom and a hopper on top.*
- In operation the tremie tube must be long enough to permit the concrete hopper to remain above water when the lower end of the tremie is placed at the desired location.
- With the gate closed, the tremie is filled with concrete and lowered into position. The gate is then opened, allowing concrete to flow into place.
- The pressure of the plastic concrete inside the tremie prevents water from flowing into the tremie.
- The tremie is raised as concrete is poured, but care must be taken to keep the bottom end of the tremie immersed in the plastic concrete.

CONCRETE CONSTRUCTION PRACTICES

Placing and Consolidating

- Consolidation is the process of removing air voids in concrete as it is placed.
- Concrete vibrators are normally used for consolidating concrete. form vibrators or vibrators attached to the outside of the concrete forms are sometimes employed. Vibrators should not be used to move concrete horizontally, as this practice may produce segregation of the concrete mix.
- Vibrators should be inserted into the concrete vertically and allowed to penetrate several inches into the previously placed layer of concrete.
- The vibrator should be withdrawn and moved to another location when cement paste becomes visible at the top of the vibrator.

CONCRETE CONSTRUCTION PRACTICES

Finishing and Curing

- Finishing is the process of bringing the surface of concrete to its final position and imparting the desired surface texture.
- Finishing operations include screeding, floating, troweling, and brooming.

FIGURE 12-16. Ride-on power trowel. (Courtesy of Wacker Corporation)

CONCRETE CONSTRUCTION PRACTICES

Finishing and Curing

- The completion of cement hydration requires that adequate moisture and favorable temperatures be maintained after concrete is placed.

- The process of providing the required water and maintaining a favorable temperature for a period of time after placing concrete is referred to as curing.

CONCRETE CONSTRUCTION PRACTICES

Hot-Weather Concreting

- The rate of hardening of concrete is greatly accelerated when concrete temperature is appreciably higher than the optimum temperature of 50–60°F (10–15.5°C). Ninety degrees Fahrenheit (32°C) is considered a reasonable upper limit for concreting operations.
- In addition to reducing setting time, higher temperatures reduce the amount of slump for a given mix. If additional water is added to obtain the desired slump, additional cement must also be added or the water/cement ratio will be increased with corresponding strength reduction.
- High temperatures, especially when accompanied by winds and low humidity, greatly increase the shrinkage of concrete and often lead to surface cracking of the concrete.

CONCRETE CONSTRUCTION PRACTICES

Hot-Weather Concreting

- Several steps may be taken to reduce the effect of high temperatures on concreting operation.
  - The temperature of the plastic concrete may be lowered by cooling the mixing water and/or aggregates before mixing.
  - Heat gain during hydration may be reduced by using Type IV (low-heat) cement or by adding a retarder.
  - Air-entraining agents, water-reducing agents, or workability agents may be used to increase the workability of the mix without changing water/cement ratios.
  - It is also advisable to reduce the maximum time before discharge of ready-mixed concrete from the normal 11⁄2 to 1 h or less.
  - The use of shades or covers will be helpful in controlling the temperature of concrete after placement.
  - Moist curing should start immediately after finishing and continue for at least 24 h."

CONCRETE CONSTRUCTION PRACTICES

Cold-Weather Concreting

- The problems of cold-weather concreting are essentially opposite to those of hot-weather concreting.
- Concrete should not be placed on a frozen surface and must not be allowed to freeze during the first 24 h after placing to avoid permanent damage and loss of strength.
- Concrete forms and reinforcing steel should be free of frost, ice, and snow and at a temperature above freezing.
- Specifications often require that concrete be placed at a minimum temperature of 50°F (10°C) and that this temperature be maintained for at least 3 days after placing.

CONCRETE CONSTRUCTION PRACTICES

Cold-Weather Concreting

- However, (ACI) recommends that a temperature of 70°F (21°C) be maintained for 3 days or 50°F (10°C) be maintained for 5 days after pouring to ensure that the concrete will attain its design strength.
- Type III (high early strength) cement or an accelerator may be used to reduce concrete setting time during low temperatures.
- The air content of the concrete mix should be checked to ensure that the air content does not exceed mix design specifications.
- Mix water and/or aggregates may be heated prior to mixing to raise the temperature of the plastic concrete. *However, cement should not be allowed to contact hot water.*
- Therefore, the aggregate should be mixed with the heated water prior to adding cement to the mix.

Construction Applications of Concrete

Construction Applications of Concrete

- A typical distribution of concrete construction costs for a reinforced concrete building is shown in Figure 12-1.

- The objective of the construction manager should be to develop a construction plan which minimizes construction costs while meeting all safety and quality requirements.

- Since formwork cost may make up as much as 60% of total concrete construction cost, every effort must be made to reduce formwork cost using the previously introduced methods.

Construction Applications of Concrete

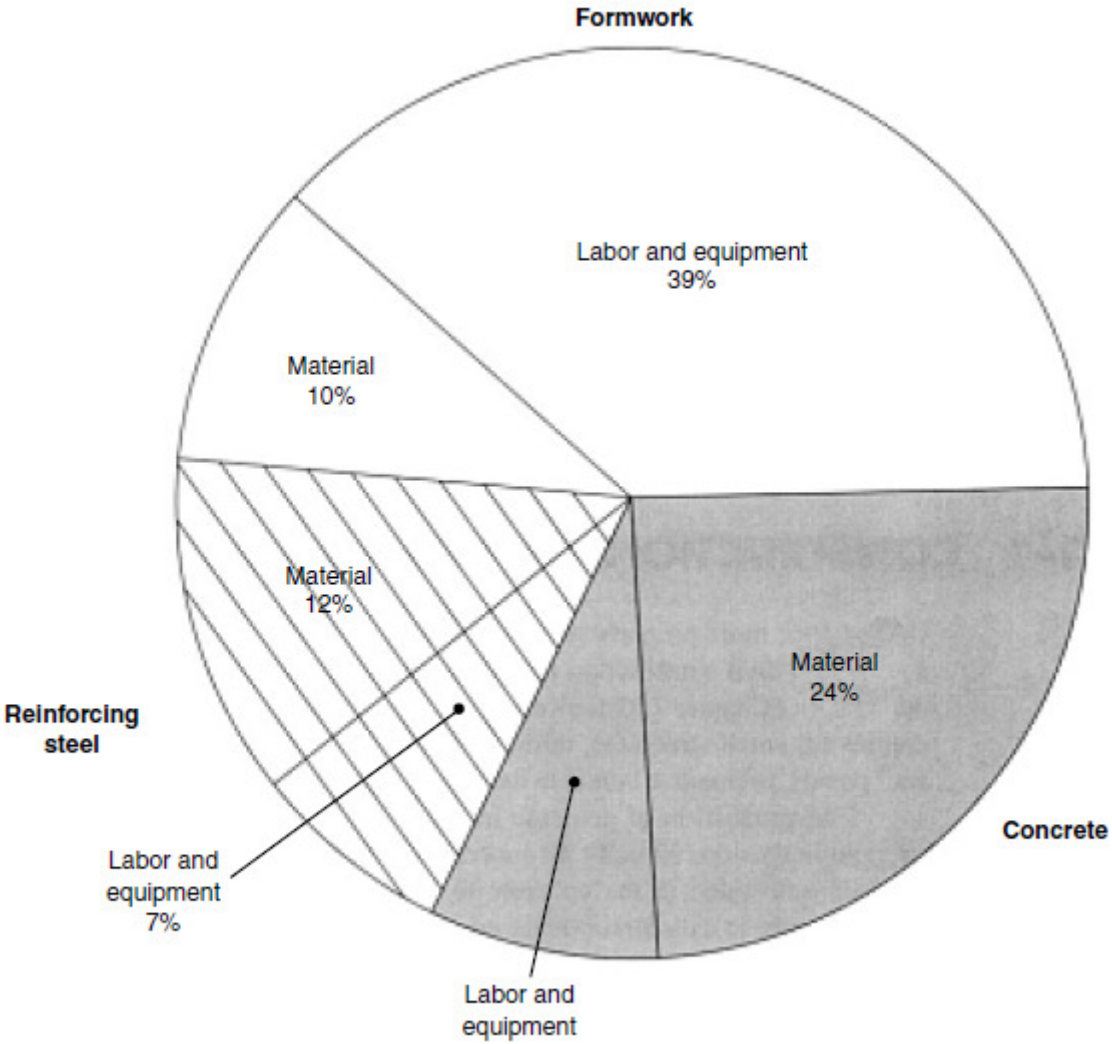

Figure 12–1 Typical distribution of concrete construction costs.

Construction Applications of Concrete

Concreting Techniques

CAST-IN-PLACE CONCRETE

- Concrete structural members are traditionally built in-place by placing the plastic concrete into forms and allowing it to harden.

- The forms are removed after the concrete has developed sufficient strength to support its own weight and the weight of any construction loads.

- Typical shapes and types of concrete structural members are developed using such technique of concreting such as the following.

-

Construction Applications of Concrete

Concreting Techniques

CAST-IN-PLACE CONCRETE

- **Walls and Wall Footings**
- Although almost any type of concrete wall may be cast in-place, this method of construction is now used primarily for foundation walls, retaining walls, tank walls, and walls for special-purpose structures such as nuclear reactor containment structures.

- Columns are normally of either circular or rectangular cross section. Some typical cast-in-place wall and column shapes are illustrated in Figure 12-2.

Construction Applications of Concrete

Concreting Techniques

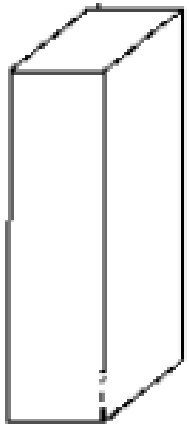

Rectangular column

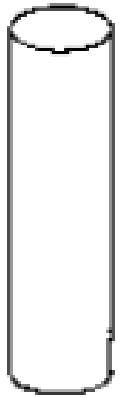

Circular column

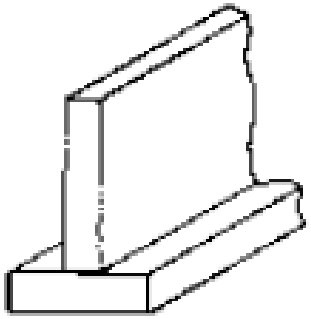

Foundation wall and footing

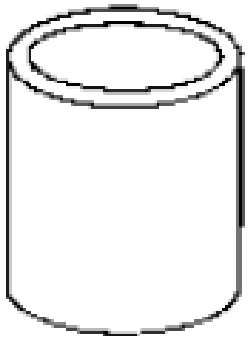

Circular tank wall

Construction Applications of Concrete

Concreting Techniques

CAST-IN-PLACE CONCRETE

- **Walls and Wall Footings**

- In placing concrete into wall and column forms, **care** must be taken to avoid segregation of aggregate and paste that may result from excessive freefall distances.

- Another problem frequently encountered in wall construction is the formation of void spaces in the concrete under blockouts for windows, pipe chases, and so on. *This can be prevented by using concrete with adequate workability accompanied by careful vibration of the concrete in these areas during placing.*

Construction Applications of Concrete

Concreting Techniques

CAST-IN-PLACE CONCRETE

- **Walls and Wall Footings**
- The relatively new technique of pumping concrete into vertical forms through the bottom of the form may also be used to eliminate the formation of voids in the concrete.

- Figure 12-3 shows a 2-ft (0.6-m)-square column form 18 ft (5.5 m) high being prepared for pumping.

Construction Applications of Concrete

Concreting Techniques

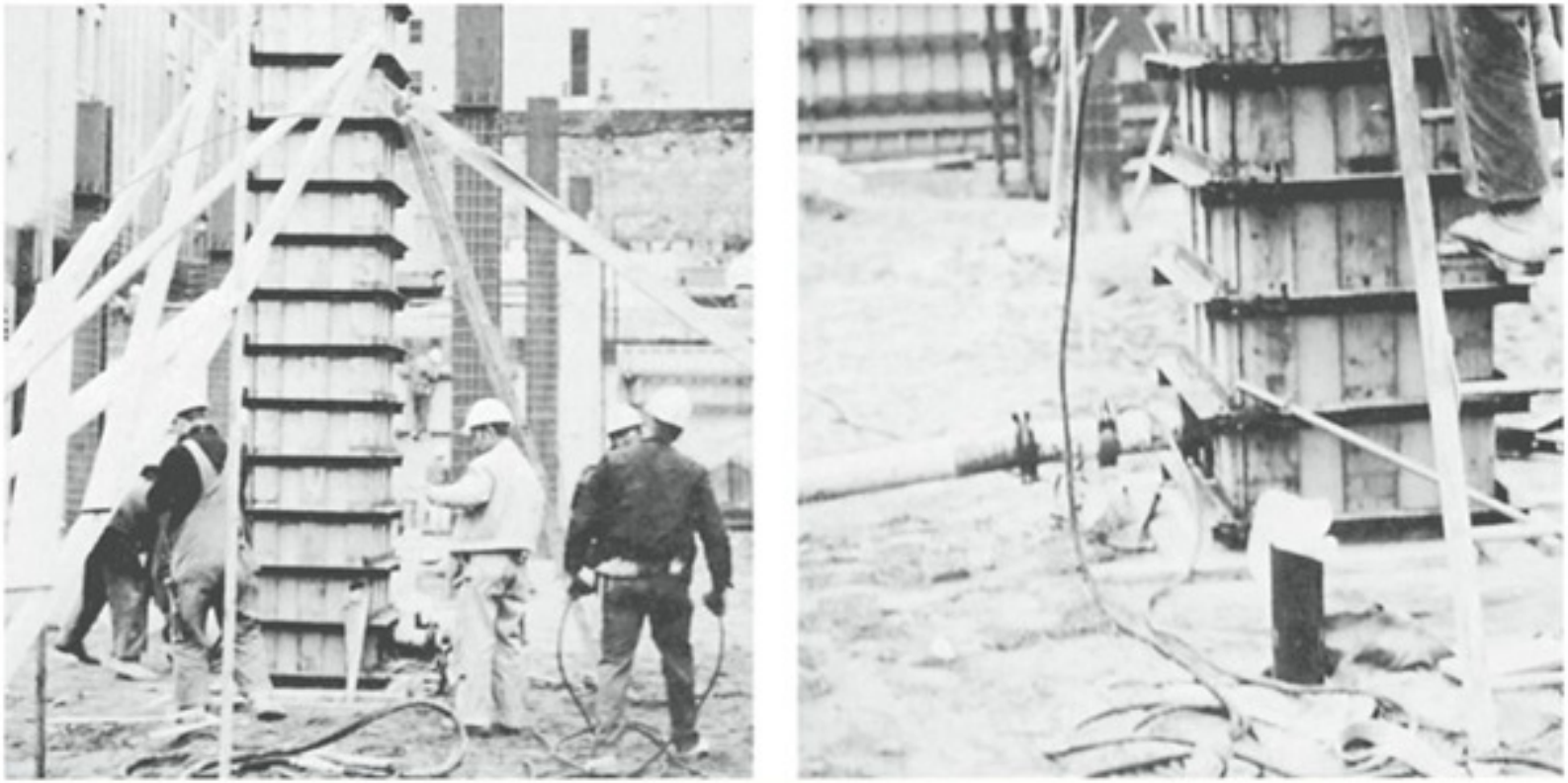

a. Preparation of form

b. Pumping hose in place on fixture at bottom of form

FIGURE 12-3. Pumping concrete into bottom of column form. (Courtesy of Gates & Sons, Inc.)

Construction Applications of Concrete

Concreting Techniques

CAST-IN-PLACE CONCRETE

- **Floors and Roofs**

- *There are a number of different types of structural systems used for concrete floors and roofs.*

- When the floor slab is principally supported in one direction (i.e., at each end), this is referred to as a one-way slab.

- Two-way slabs provide support in two perpendicular directions.

- Flat slabs are supported directly by columns without edge support.

Construction Applications of Concrete

Concreting Techniques

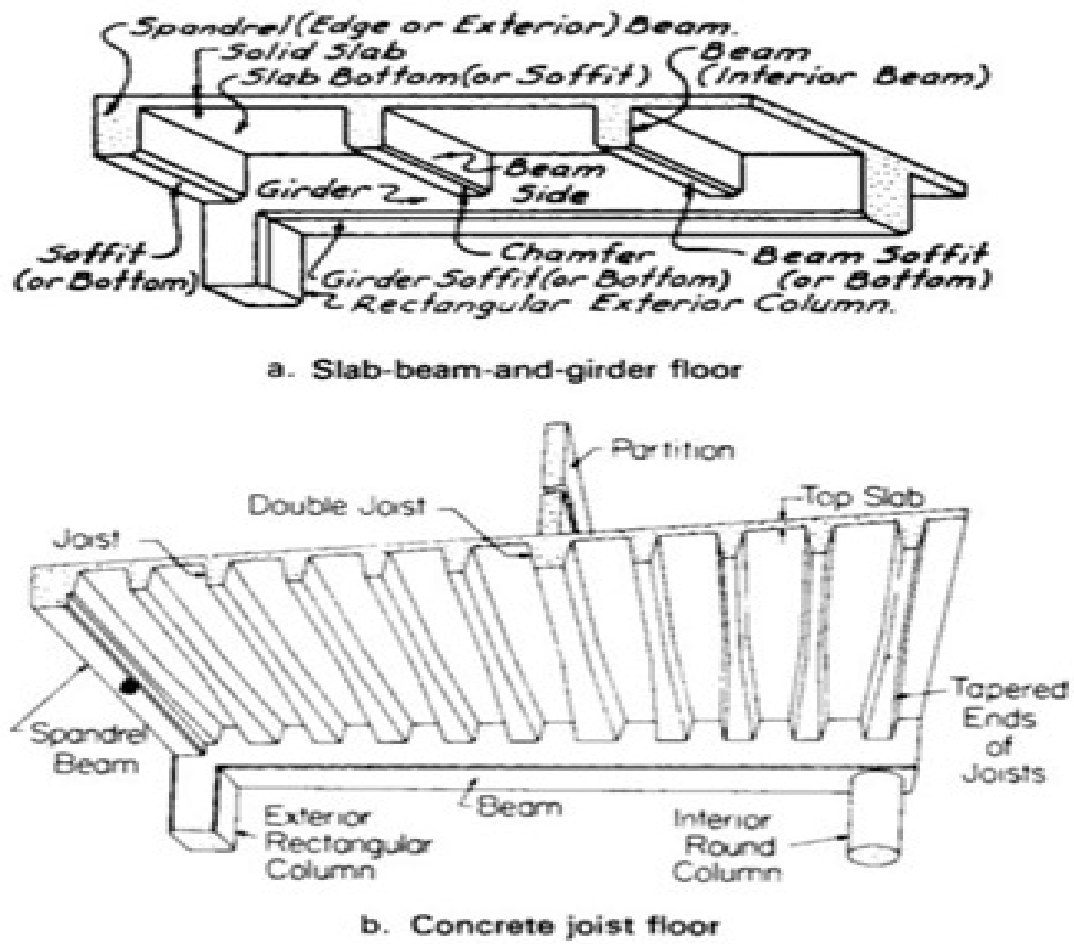

FIGURE 12-4. Floor slab construction. (Courtesy of Concrete Reinforcing Steel Institute [CRSI])

Construction Applications of Concrete

Concreting Techniques

FIGURE 12-6. Flat slab and flat plate slab. (Courtesy of Concrete Reinforcing Steel Institute [CRSI])

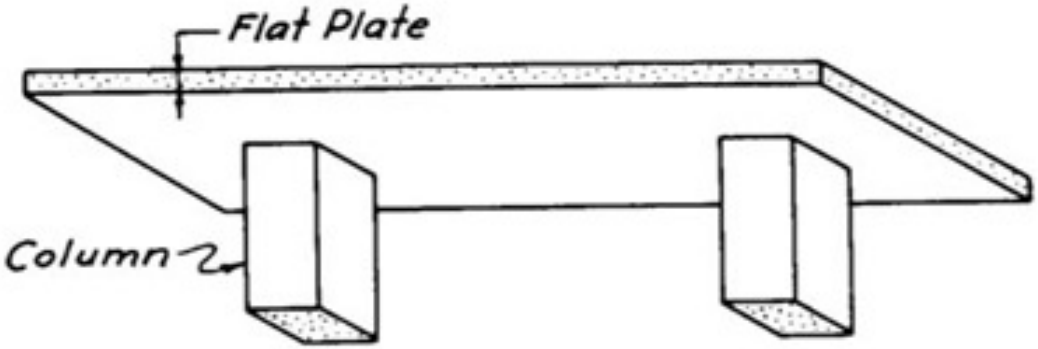

a. Flat plate slab

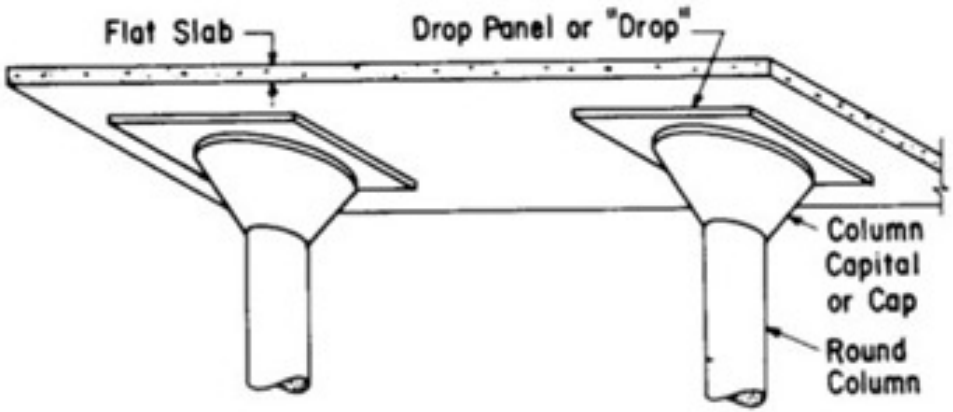

b. Flat slab

Construction Applications of Concrete

Concreting Techniques

PRECAST CONCRETE

- *Precast concrete* is concrete that has been cast into the desired shape prior to placement in a structure.

- There are a number of *advantages* obtained by removing the concrete forming, placing, finishing, and curing operations from the construction environment.

- Precasting operations usually take place in a central plant where industrial production techniques may be used.

Construction Applications of Concrete

Concreting Techniques

PRECAST CONCRETE

- Since standard shapes are commonly used, the repetitive use of formwork permits forms to be of high quality at a low cost per unit.

- Forming procedures used make it relatively simple to incorporate pre-stressing in structural members.

- Upon arrival at the job site, precast structural members may be erected much more rapidly than conventional cast-in-place components.

Construction Applications of Concrete

Concreting Techniques

PRECAST CONCRETE

- There are a number of standard shapes commonly used for precast concrete structural members. *Figure 12-7 illustrates some common beam and girder sections.*
- The inverted Tee shape is normally used with a cast-in-place concrete slab which forms the upper flange of the section.

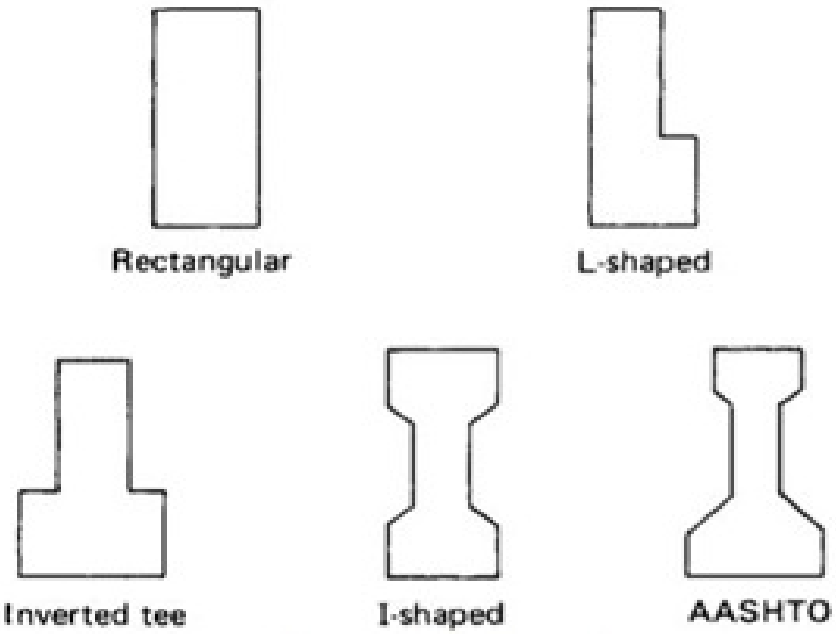

FIGURE 12-7. Precast beam and girder shapes.

Construction Applications of Concrete

Concreting Techniques

PRECAST CONCRETE

- TILT-UP CONSTRUCTION is a *special form of precast wall construction* in which wall panels are cast horizontally at the job site and then erected.
- The wall panels are usually cast on the previously placed building floor slab using only edge forms to provide the panel shape. *The floor slab thus serves as the bottom form for the panel.*
- Panels may also be cast one on top of another where slab space is limited.
- A bond-breaker compound is applied to the slab to prevent the tilt-up panel from sticking to the slab.

Construction Applications of Concrete

Concreting Techniques

PRECAST CONCRETE

- *Some suggestions for obtaining the best results with tilt-up construction procedures include:*
- **DO**
- Pour a high-quality slab.
- Keep all plumbing and electrical conduits at least 1 in. under floor surface.
- Vibrate the slab thoroughly.
- Let cranes operate on the floor slab.
- Pour wall panels with their exterior face down.
- Use load-spreading frames when lifting panels that have been weakened by windows and other cutouts.

Construction Applications of Concrete

Concreting Techniques

PRECAST CONCRETE

- *Some suggestions for obtaining the best results with tilt-up construction procedures include:*
- **DON'T**
- Erect steel framework before raising wall panels.
- Fail to cure floor slab properly.
- Move crane farther than necessary when raising wall panels.
- Lay wall panels down after lifting.

Construction Applications of Concrete

Concreting Techniques

PRE-STRESSED CONCRETE

- Pre-stressed concrete is concrete to which an initial compression load has been applied.
- Since concrete is quite strong in compression but weak in tension, pre-stressing serves to increase the load that a beam or other flexural member can carry before allowable tensile stresses are reached.
- Figure 12-10 illustrates the stress pattern across a beam section resulting from external loads and pre-stressing.

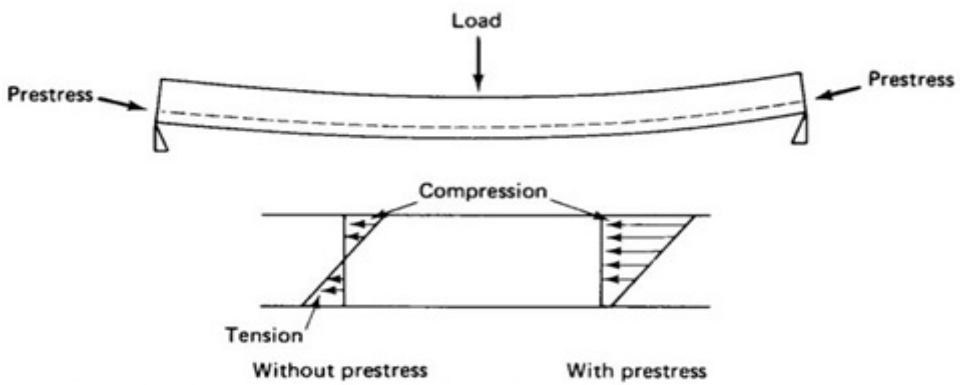

FIGURE 12-10. Stresses in a prestressed simple beam.

Construction Applications of Concrete

Concreting Techniques

PRE-STRESSED CONCRETE

- The use of pre-stressing in a concrete structural member *permits a smaller, lighter member to be used in supporting a given load.*

- Pre-stressing also reduces the amount of deflection in a beam.

- Since the member is always kept under compression, any cracking that does occur will remain closed up and not be apparent.

- These advantages of pre-stressing are offset somewhat by the higher material, equipment, and labor cost involved in the production of pre-stressed components. Nevertheless, the use of pre-stressing, particularly in precast structural members, has become widespread.

Construction Applications of Concrete

Concreting Techniques

PRE-STRESSED CONCRETE

- CAUTION must be observed in handling and transporting pretensioned prestressed members, particularly if they are asymmetrically stressed. In the beam of Figure 12-11, the prestressing has been placed off center in the lower portion of the beam.
- This placement better offsets the tension that would normally occur in the lower chord when the beam is loaded. *If this beam were to be lifted at the top center, it would tend to bend as shown, resulting in tension along the top chord.*
- The presence of the off-center compression load provided by the prestressing would serve to increase the tension in the top chord and may cause failure of the member prior to erection.
- *Hence this type of beam should not be raised using a center lift. It should be lifted by the ends or by using multiple lift points along the beam.*

Construction Applications of Concrete

Concreting Techniques

FIGURE 12-11. Lifting prestressed beam at the center.

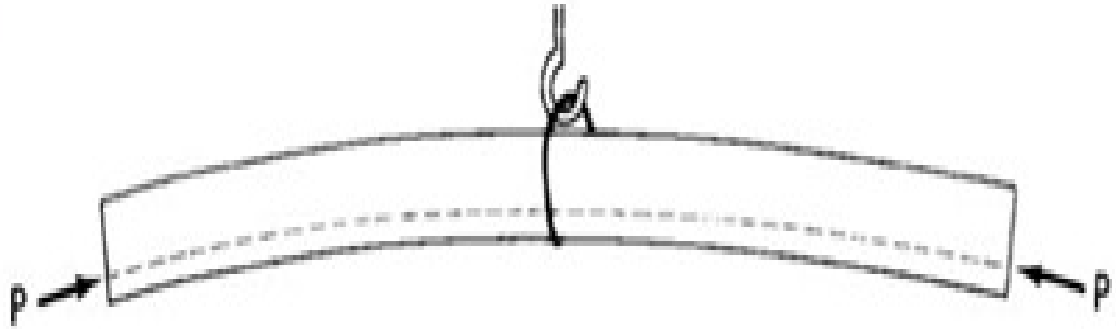

Thank You

Questions ?