Arab Academy for Science, Technology & Maritime Transport
College of Engineering & Technology
Construction & Building Engineering

CB 524

Methods and Equipment for Construction 2

Excavation Equipment: Shovel

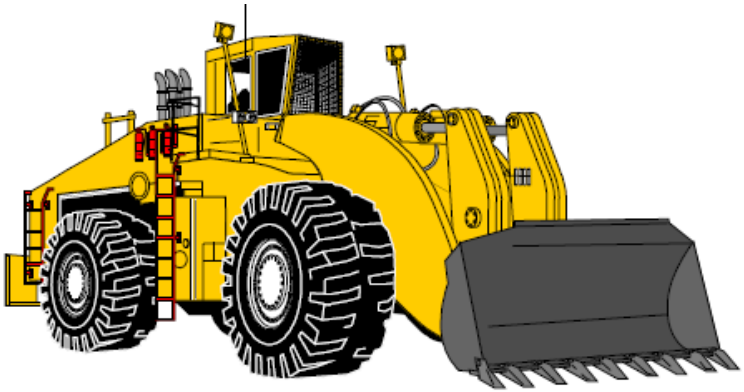

Instructor: Ahmed Elyamany

Courtesy of Dr. Ahmed Alhady

EXCAVATORS TYPES

- **There are two types of excavators:**

1- Front Shovel (power shovel):

To excavate usually in levels higher than the ground level.

2- Back Shovel (back Hoe):

To excavate usually in levels lower than the ground level.

EXCAVATORS: BACKHOE

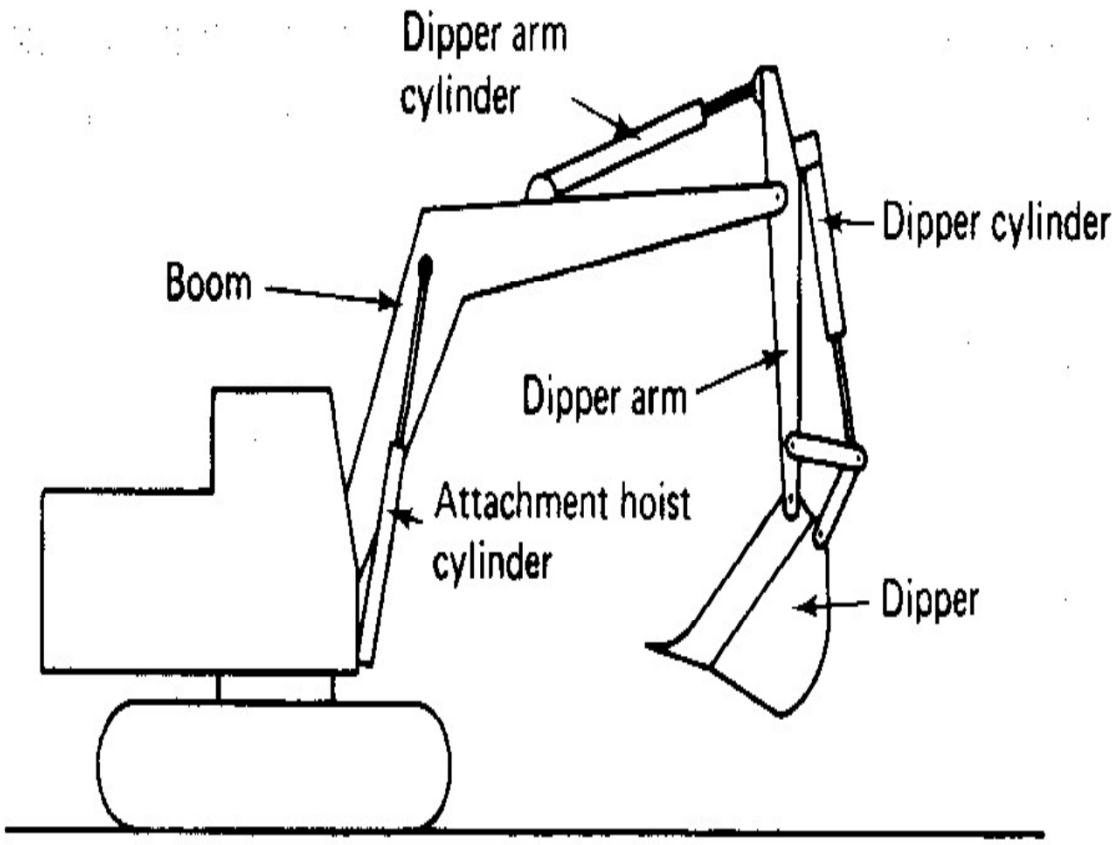

Figure 3–8 Components of a hydraulic excavator.

EXCAVATORS: BACKHOE

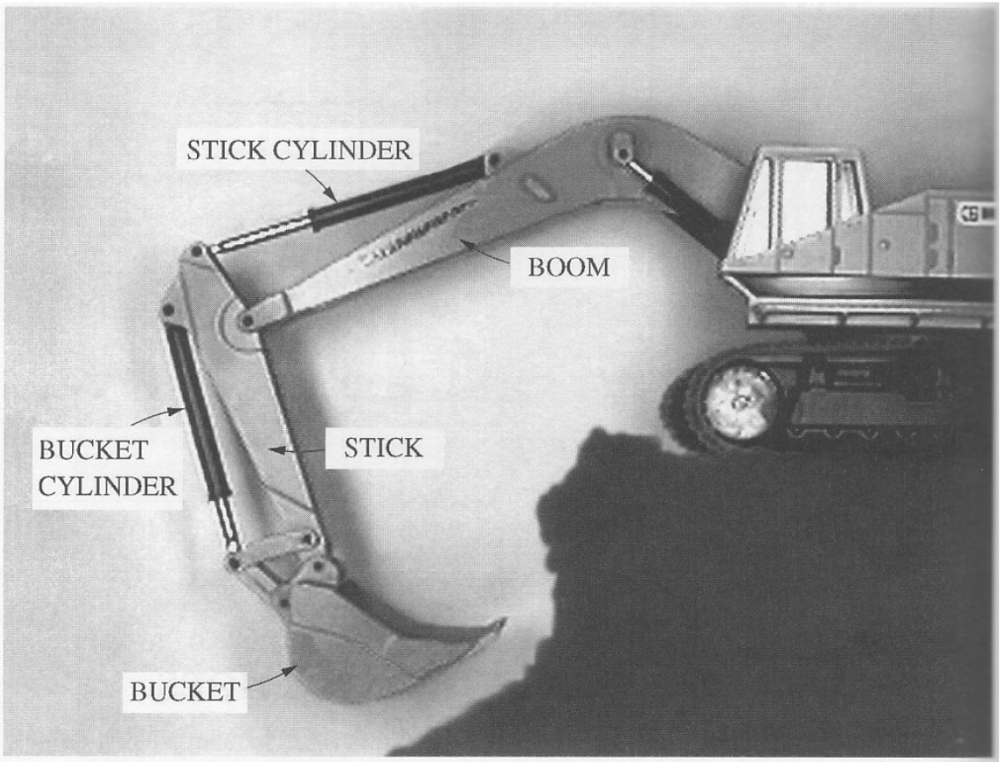

FIGURE 8.8 | Arrangement of a hoe's hydraulic cylinders to develop digging forces.

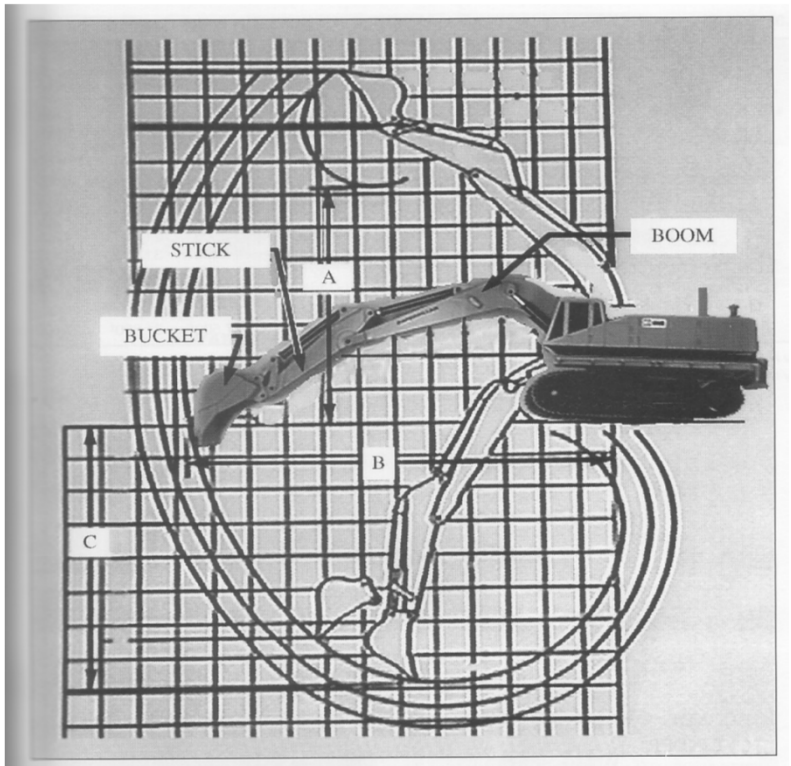

FIGURE 8.7 | Basic parts and operating ranges of a hydraulic hoe: A, dumping height; B, digging reach; C, maximum digging depth.

EXCAVATORS: BACKHOE

- **Backhoes = Back shovels = Pull shovels= Trench hoes = Drag shovels = Drag hoes.**
- Backhoes are mainly used to excavate ditches below the natural ground level.
- **Types of hoes:**
  - Mechanically or cable operated hoes.
  - **Hydraulic operated hoes.**
  - **Gradall (Telescoping boom and rotating dipper hoes).**

EXCAVATORS: BACKHOE

FIGURE 8.5 | Crawler-mounted hydraulic hoe loading an off-highway truck.

FIGURE 8.6 | Wheel-mounted hydraulic hoe.

Figure 3–9 Telescoping-boom hydraulic excavator. (Courtesy of The Gradall Company)

EXCAVATORS: BACKHOE USES

- Digging trenches.
- Bulk pit excavation.
- Slopping and grading work. **(Gradall is better)**
- Laying pipes. (you have to check for tipping)
- Cleaning road side ditches. **(Gradall is better)**

EXCAVATORS: BACKHOE
Operation Methods

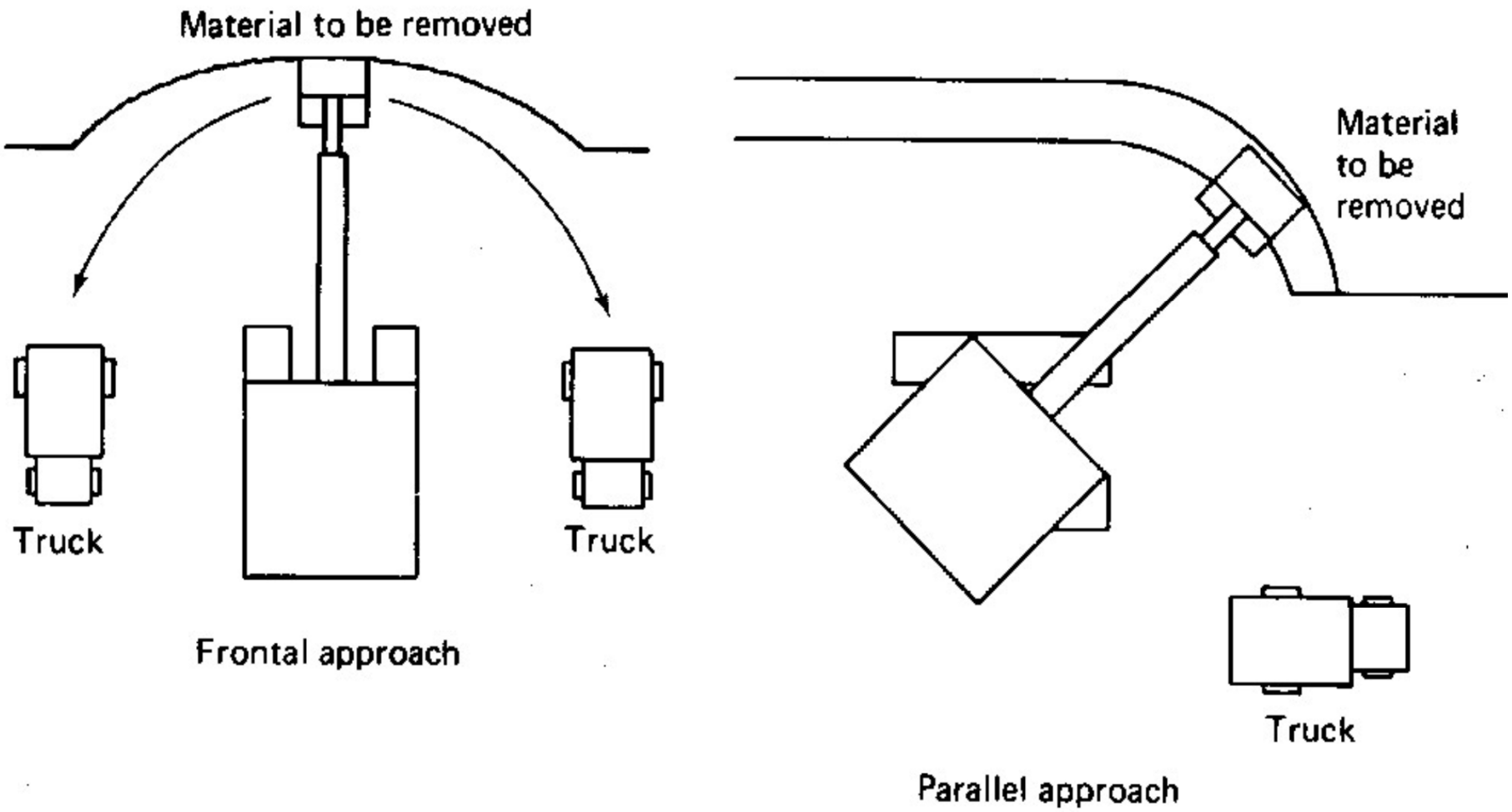

Figure 3–6 Shovel approach methods.

EXCAVATORS: BACKHOE Selection

The criteria to select a convenient backhoe can be listed as follows:

- Max. digging depth required.
- Max. working radius required (digging and dumping).
- Max. dumping height required.
- Max. digging width required.
- Hoisting capabilities: handling pipes, …etc.

EXCAVATORS: BACKHOE
Multipurpose Backhoe

- Backhoe is used for several purposes by changing the attachments, such as the bucket.
- It can be used as: rock driller by attaching the driller to its boom, earth drilling by attaching the auger to it, …etc.
- It can be used for lifting purposes but some precautions have to be taken:
  - Hoist load < 75% of tipping load.
  - Hoist load < 87% of hoe hydraulic capacity.
  - Hoist load shall not exceed the machines' structural capabilities.

EXCAVATORS: BACKHOE
Multipurpose Backhoe

TABLE 8.3 | Representative dimensions, loading clearance, and lifting capacity hydraulic crawler hoes

Size bucket (cy)	Stick length (ft)	Maximum reach at ground level (ft)	Maximum digging depth (ft)	Maximum loading height (ft)	Lifting capacity at 15 ft			
					Short stick		Long stick	
					Front (lb)	Side (lb)	Front (lb)	Side (lb)
$\frac{3}{8}$	5–7	19–22	12–15	14–16	2,900	2,600	2,900	2,600
$\frac{3}{4}$	6–9	24–27	16–18	17–19	7,100	5,300	7,200	5,300
1	5–13	26–33	16–23	17–25	12,800	9,000	9,300	9,200
$1\frac{1}{2}$	6–13	27–35	17–21	18–23	17,100	10,100	17,700	11,100
2	7–14	29–38	18–27	19–24	21,400	14,500	21,600	14,200
$2\frac{1}{2}$	7–16	32–40	20–29	20–26	32,600	21,400	31,500	24,400
3	10–11	38–42	25–30	24–26	32,900*	24,600*	30,700*	26,200*
$3\frac{1}{2}$	8–12	36–39	23–27	21–22	33,200*	21,900*	32,400*	22,000*
4	11	44	29	27	47,900*	33,500*		
5	8–15	40–46	26–32	25–26	34,100†	27,500†	31,600†	27,600*

*Lifting capacity at 20 ft.

†Lifting capacity at 25 ft.

EXCAVATORS: BACKHOE
Productivity Factors

1. Class of material.
2. Height of cut.
3. Angle of swing.
4. Operator skill.
5. Condition of the shovel.
6. Haul-unit exchange.
7. Size of hauling units.
8. Handling of oversize material.
9. Cleanup of loading area.

EXCAVATORS: BACKHOE
Productivity Factors

1. BACKHOE BUCKET CAPACITY

There are two major capacities for the backhoe bucket:

1) Struck capacity (SC).
2) Heaped capacity (HC).

- **HC = 1.15 SC.**

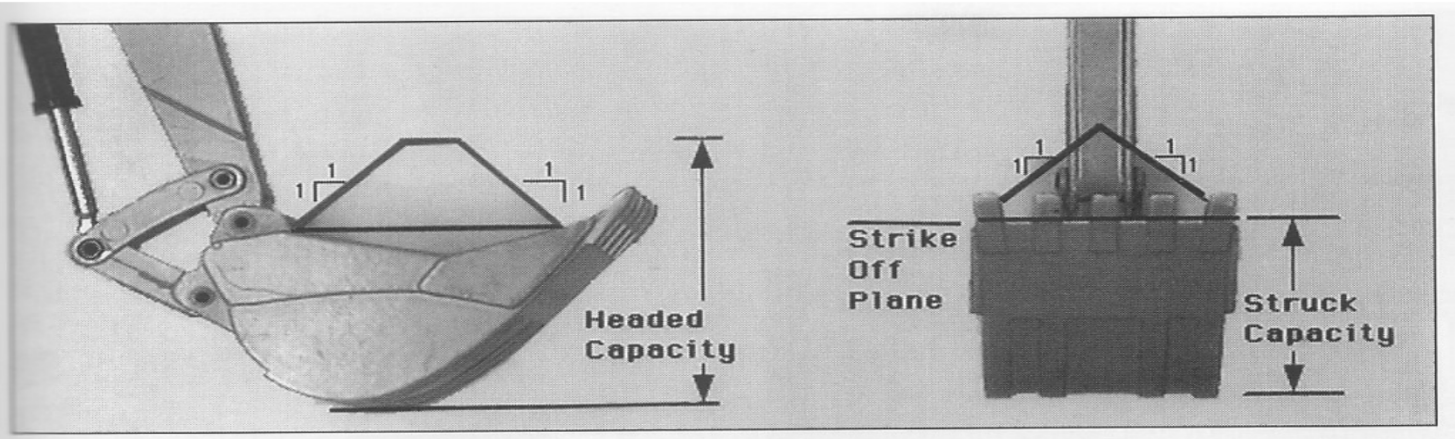

FIGURE 8.9 | Hydraulic hoe bucket capacity rating dimensions.

EXCAVATORS: BACKHOE
Productivity Factors

1. BACKHOE BUCKET CAPACITY

- **BUCKET FILL FACTOR**

TABLE 8.4 | Fill factors for hydraulic hoe buckets

Material	Fill factor* (%)
Moist loam/sandy clay	100–110
Sand and gravel	95–110
Rock—poorly blasted	40–50
Rock—well blasted	60–75
Hard, tough clay	80–90

*Percentage of heaped bucket capacity

Reprinted courtesy of Caterpillar Inc.

EXCAVATORS: BACKHOE Productivity Factors

1. BACKHOE BUCKET CAPACITY

- **EXAMPLE 1:**
- **A 2 cu yd hydraulic backhoe is excavating in tough clay. What is the excavator practical capacity in m3bm? Take the lower value for the bucket (dipper) fill factor.**
- **Solution:**

Based on Table 8.1, k = 0.8

Based on a given table (conversion factor),

f = 0.79 (from loose to bank measure).

Then, capacity =

2 cu yd*0.76(m3/cy)*0.79(f)*0.8(k) = **0.961 m^3bm**

EXCAVATORS: BACKHOE
Productivity Factors

- **OTHER FACTORS**

All other factors are the same as front shovel.

EXCAVATORS: BACKHOE

HELPFUL HINTS FOR EFFECTIVE HOE OPERATION

1. Digging should be planned so that dipper teeth CUT as near as possible to the line of the digging cable.
2. Length and depth of cut should be judged to produce a full dipper at every pass. Full loads on every pass produce more pay dirt than a faster cycle with partly filled dipper. Full loads should be the first objective, followed by speed increases for fast cycles.
3. A hoe will dig fairly hard materials. Where possible, blasting will often be less expensive than bulling through hardpan and rock strata with the hoe dipper.
4. Using the dipper teeth as a pick axe by extending handle to maximum reach, then dropping front end to break ledge rock is very bad practice, the result being serious front end damage.
5. Once the trench is open, ledge rock can be broken by pulling dipper up under the layers. Top layers are pulled first with one or two layers lifted at a time.

Figure 3–10 Helpful hints for effective hoe operation. (Permission to reproduce this material has been granted by the Construction Industry Manufacturers Association (CIMA). CIMA assumes no responsibility for the accuracy of this reproduction.)

EXCAVATORS:
Hoes VS Front Shovel

No.	Front Shovel	Backhoe
1	Almost same production rate at moderate depths	Almost same production rate at moderate depths
2	Low cycle time	Higher cycle time because hoist distance is greater as the boom and stick must be fully extended
3	Higher productivity	Lower productivity, especially when the depth increases

EXCAVATORS: General Output Model (GOM)

Hourly output (cy/hr or m3/hr) =

$$P = (3600 * Q * f * k * f_1 * f_2 * t)/CT$$

Where; k = bucket fill factor (Table 8.4).

P = productivity in cy/hr or m^3/hr.

Q = bucket capacity (heaped capacity) in loose cy or m^3.

f = earth volume change conversion factor.

f_1 = swing-depth factor.

f_2 = job and management conditions.

t = operating time factor.

CT = cycle time in seconds.

EXCAVATORS: Productivity Comments

- **Cycle time estimation is shown in <u>Table 8.5</u> that has several constraints:**
  - Optimum depth of cut is 30%-60% of the max. digging depth. If actual digging depth is <30% or >60%, then you have to adjust the factors in the GOM model.
  - Angle of swing is ranging from 30°-60°.
  - Hauling trucks are at the same level as the hoe.
- Cycle time saving of 12.6% is obtained if the hoe operates above the hauling units level.

EXCAVATORS: Productivity Comments

CYCLE TIME ESTIMATION

TABLE 8.5 | Excavation cycle times for hydraulic crawler hoes under average conditions.*

Bucket size (cy)	Load bucket (sec)	Swing loaded (sec)	Dump bucket (sec)	Swing empty (sec)	Total cycle (sec)
<1	5	4	2	3	14
1–1½	6	4	2	3	15
2–2½	6	4	3	4	17
3	7	5	4	4	20
3½	7	6	4	5	22
4	7	6	4	5	22
5	7	7	4	6	24

*Depth of cut 30 to 60% of maximum digging depth; swing angle 30 to 60°; loading haul units on the same level as the excavator.

EXCAVATORS: Example 4

A hydraulic backhoe of 3.5 cy bucket is excavating very hard clay. The depth of cut is 2.4 m. The angle of swing is 45°. The loading height is 3.0 m. The operating time is expected to be 50 min per hr.

Management and job conditions factor f_2 is assumed to be 0.8. **What is the hourly rate of production in m^3bm/hr?** Take the smallest applicable value for the bucket fill factor and other factors.

EXCAVATORS: Example 4

- Capacity: Q = 3.50 x 0.76 =2.66 m3 loose measure
- Earth volume change conversion factor from loose to bm (from table in handouts): f = 0.79
- Based on Table 8.3:

  Maximum loading height = 6.4 m

  Maximum depth of cut = 7.0 m
- Height percent = 3.0*100/6.4 = 47% <60% **&** >30%.
- Depth of cut percent = 2.4*100/7 = 34.3% <60% **&** >30%.
- Depth-swing factor: f_1 = 1.0 because it fulfills the two depth and angle of swing constraints.

EXCAVATORS: Example 4

- Job and management efficiency factor (from table in the handouts): f_2= 0.80
- Bucket fill factor (from table 8.4): k = 0.80
- Operating time factor: t = 50/60 = 0.83
- Cycle time (CT) (Table 8.5) = 22 sec
- **Rate of output with GOM model:**

  P = $(3600 * Q * f * K * f_1 * f_2 * t)/CT =$

  $= (3{,}600 * 2.66 * 0.79 * 0.80 * 1.0 * 0.80 * 0.83)/22 =$

  = 182.66 m^3 bm/hr.

Thank You