Arab Academy for Science, Technology & Maritime Transport
College of Engineering & Technology
Construction & Building Engineering

CB 524

Methods and Equipment for Construction 2

Excavation Equipment: Shovel

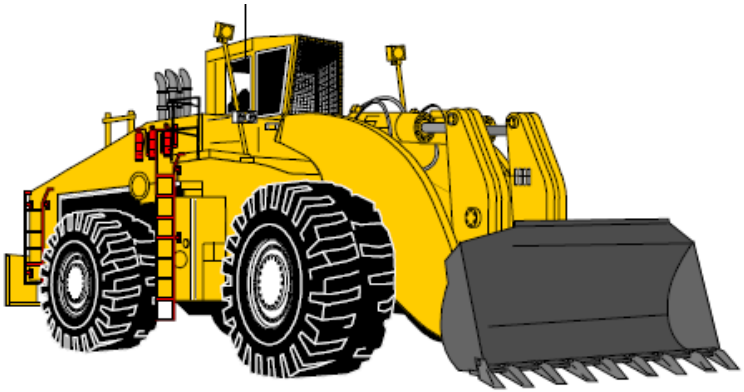

Instructor: Ahmed Elyamany

Courtesy of Dr. Ahmed Alhady

EXCAVATORS TYPES

- **There are two types of excavators:**

  1- Front Shovel (power shovel):

  To excavate usually in levels higher than the ground level.

  2- Back Shovel (back Hoe):

  To excavate usually in levels lower than the ground level.

- **Two types based on control method:**
  - Cable control.
  - Hydraulic control.

EXCAVATORS TYPES

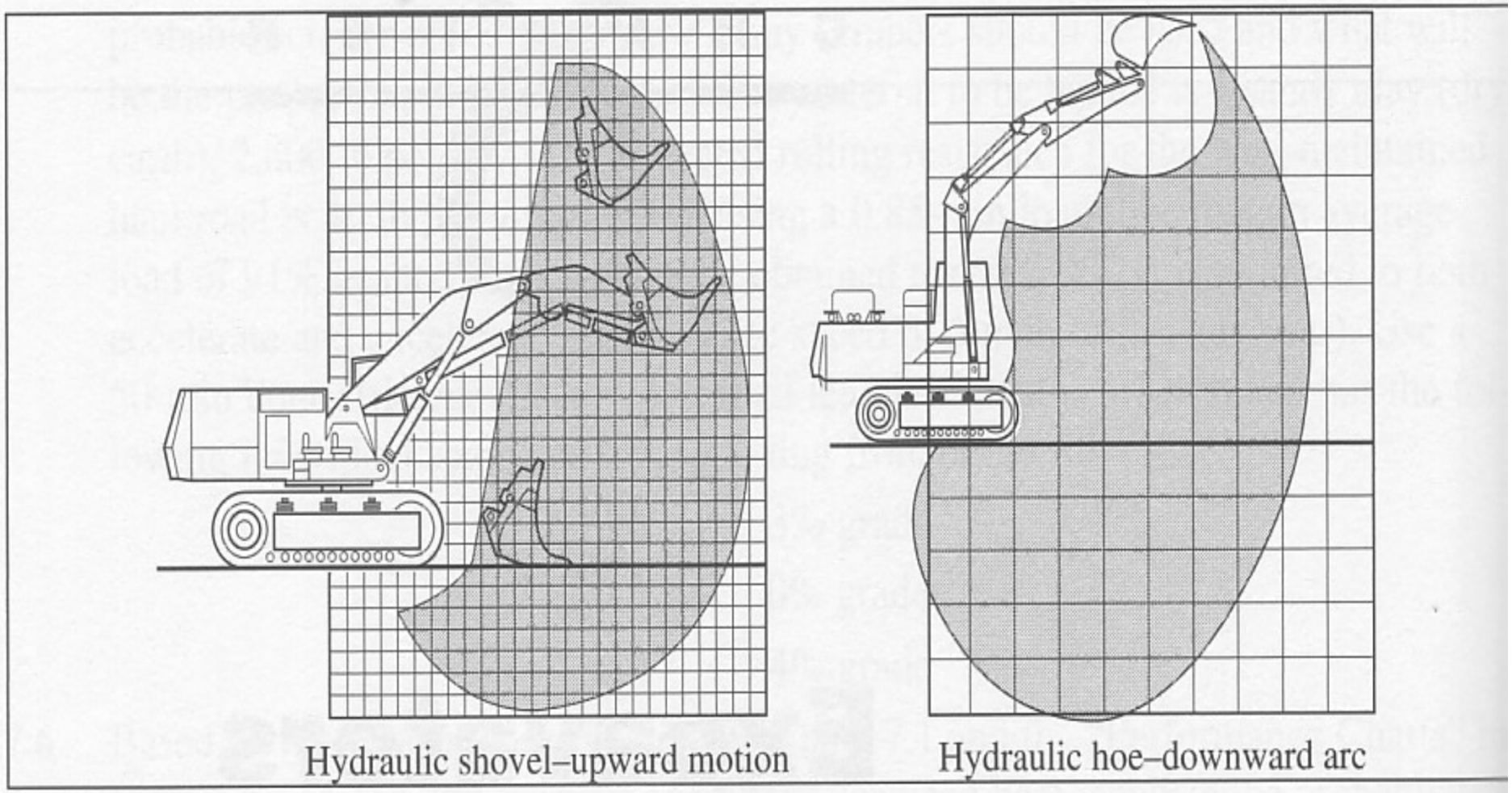

FIGURE 8.1 | Digging motion of hydraulic excavators.

EXCAVATORS MOUNTING TYPES

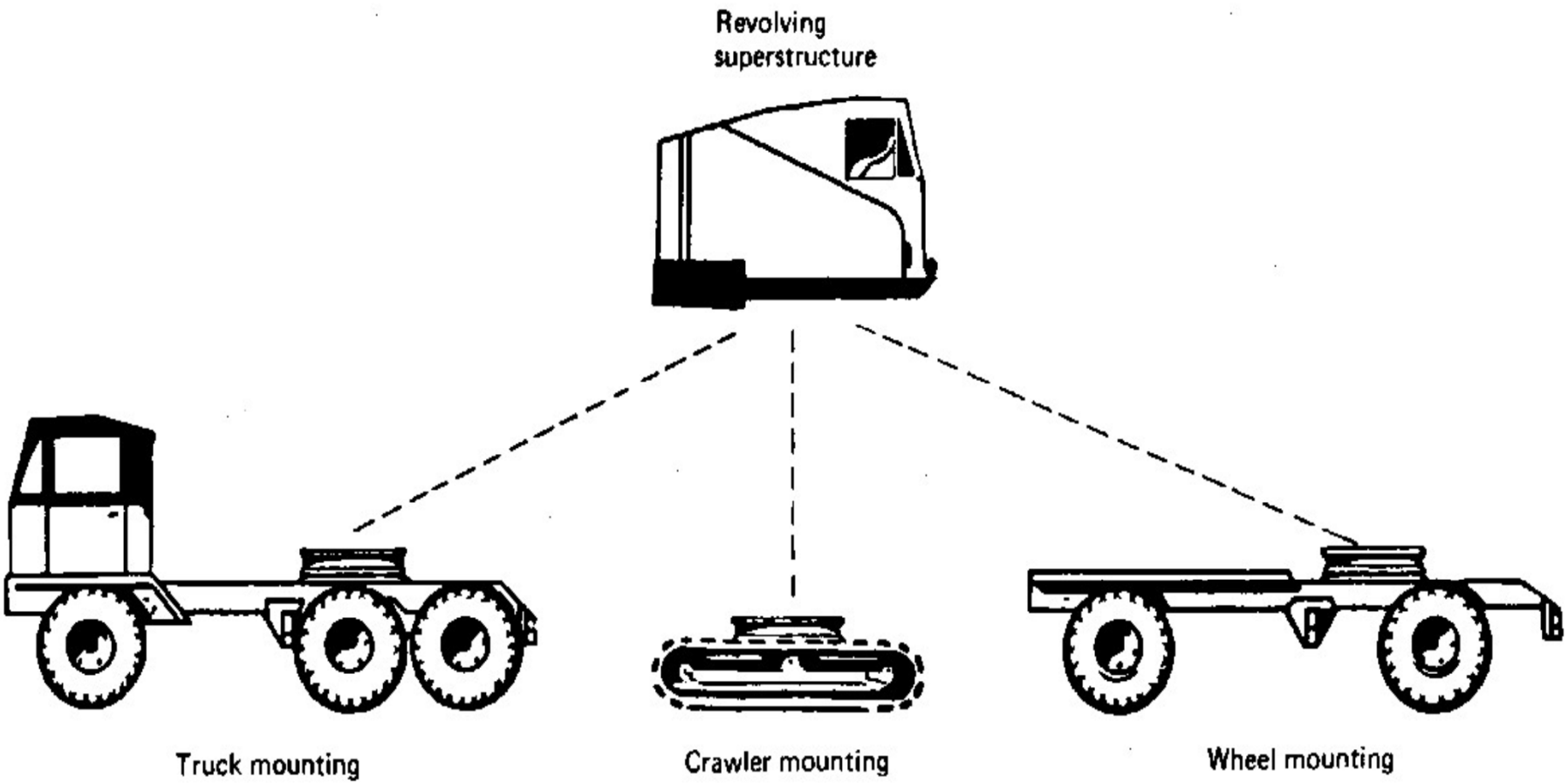

Figure 3–2 Mountings for hydraulic excavators and crane-shovels. (U.S. Department of the Army)

EXCAVATORS MOUNTING TYPES

Item	Crawler Mounted	Wheel Mounted	Truck Mounted
Travel Ground Conditions	Soft	Hard	Hard
Excavated soil types	Heavy duty & rock exc.	Medium duty & medium exc.	Medium duty & medium exc.
Max. travel speed	2 mi/hr	30 mi/hr	50 mi/hr
Transport-ation	Hard and expensive	Easy	Easy

EXCAVATORS: FRONT SHOVEL

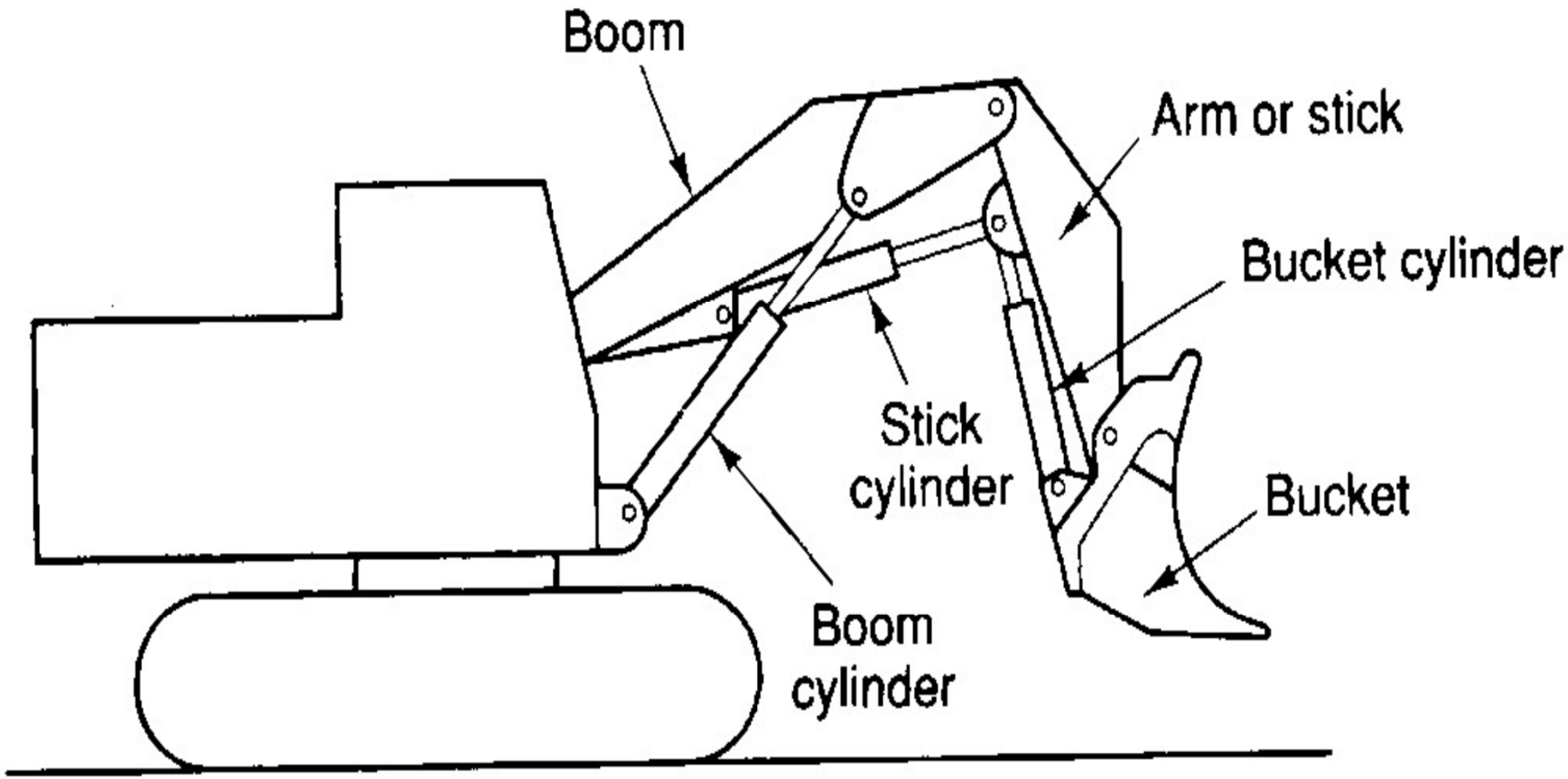

Figure 3–4 Components of a hydraulic shovel.

EXCAVATORS: FRONT SHOVEL

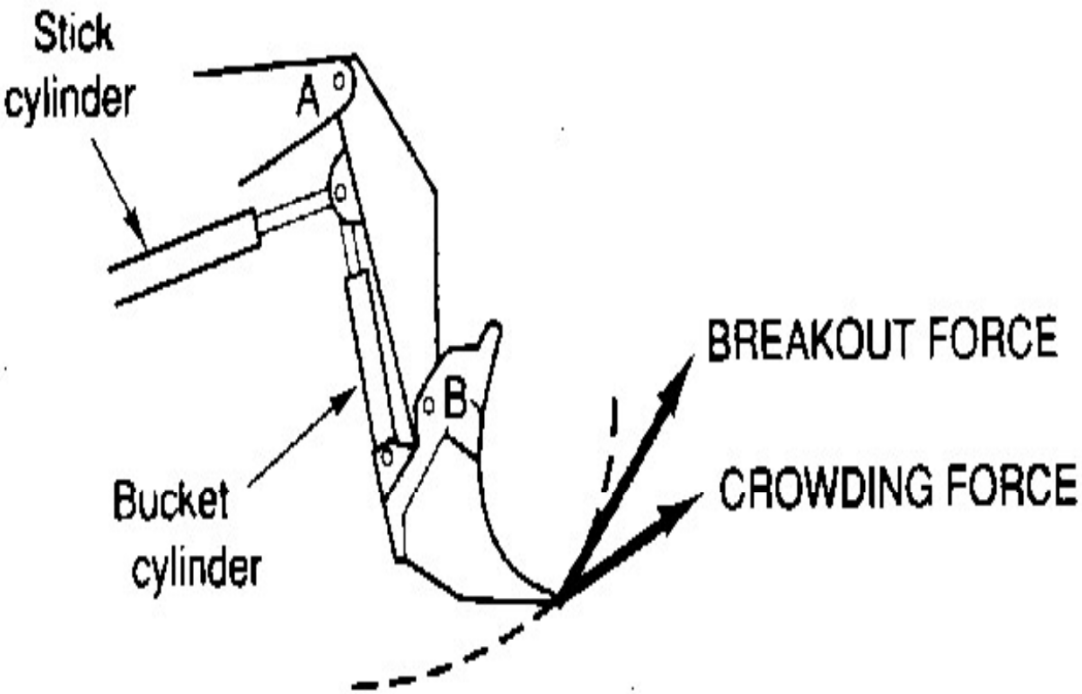

Figure 3–5 Digging action of a hydraulic shovel.

EXCAVATORS: FRONT SHOVEL

FIGURE 8.4 | Size of haul truck matched to hydraulic front shovel bucket size.

EXCAVATORS: FRONT SHOVEL USES

- Excavating (advantage: face excavation due to its strong hydraulic power, especially for hard materials). (disadvantage: under ground level excavation due to water table and soil conditions).
- Loading trucks.
- Operating in cut and fill.
- Wide area excavation.
- Forming heaps.
- Trench excavation. (Backhoe or trencher are better).
- Loading soils. (Dragline and clamshell are better).
- Excavate under ground level. (Backhoe is better).

EXCAVATORS: FRONT SHOVEL OPERATION METHODS

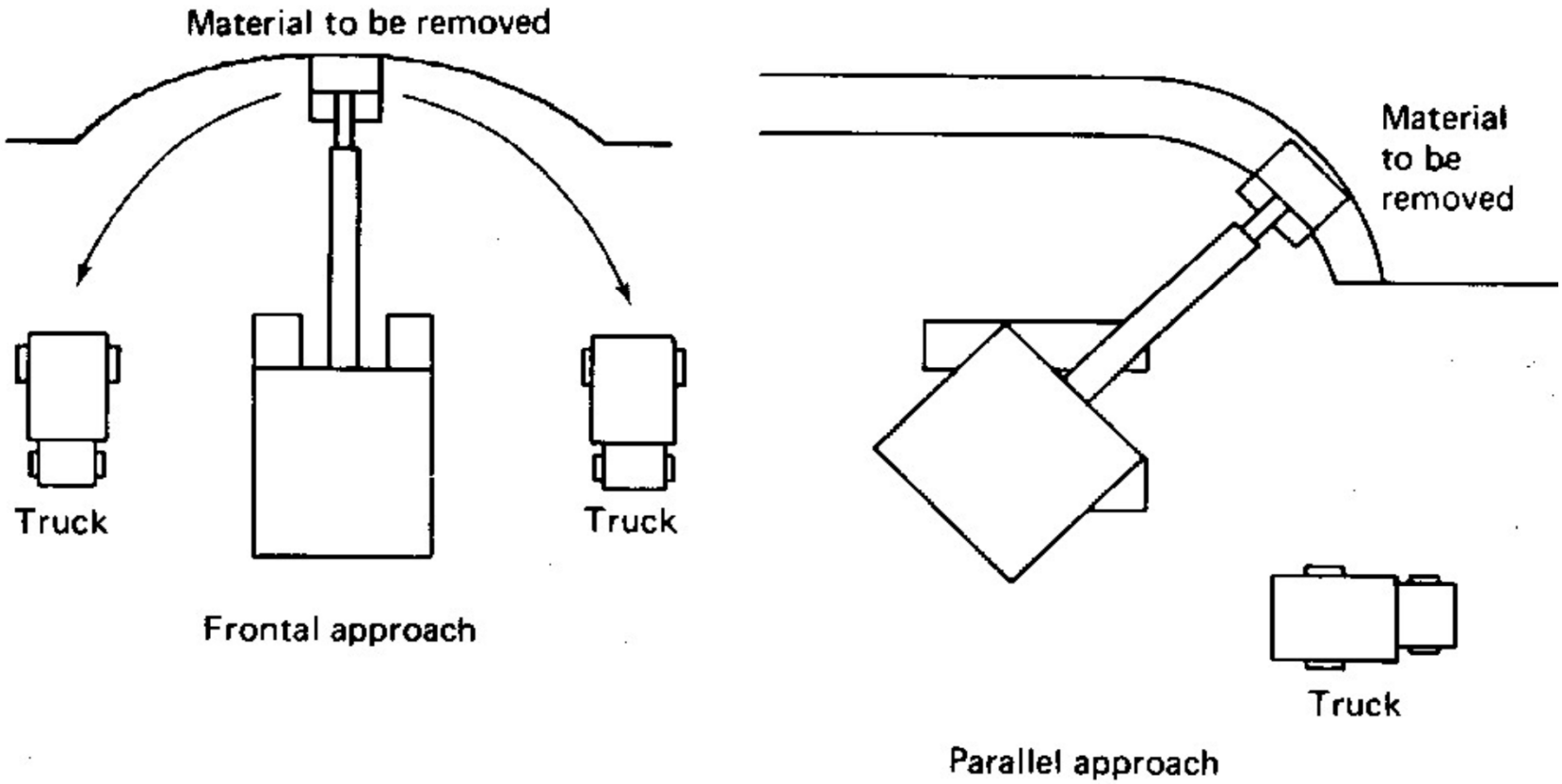

Figure 3–6 Shovel approach methods.

EXCAVATORS: FRONT SHOVEL

PRODUCTIVITY FACTORS:

1. Class of material.
2. Height of cut.
3. Angle of swing.
4. Operator skill.
5. Condition of the shovel.
6. Haul-unit exchange.
7. Size of hauling units.
8. Handling of oversize material.
9. Cleanup of loading area.

EXCAVATORS: FRONT SHOVEL Productivity Factors

1. <u>Front Shovel Bucket Capacity:</u>

- There are two major capacities for the front shovel bucket:
    1. Struck Capacity (SC).
    2. Heaped Capacity (HC).
- **HC = 1.15 SC.**

HC

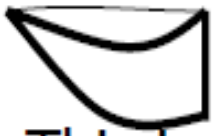

SC

This is the standard

EXCAVATORS: FRONT SHOVEL Productivity Factors

1. Front Shovel Bucket Capacity:

- Bucket fill factor

TABLE 8.1 | Fill factors for front shovel buckets

Material	Fill factor* (%)
Bank clay; earth	100–110
Rock-earth mixture	105–115
Rock—poorly blasted	85–100
Rock—well blasted	100–110
Shale; sandstone—standing bank	85–100

*Percentage of heaped bucket capacity

Reprinted courtesy of Caterpillar Inc.

EXCAVATORS: FRONT SHOVEL Productivity Factors

1. **Front Shovel Bucket Capacity:**

- **EXAMPLE 1:**

  A 2 cy hydraulic front shovel is excavating in common earth. What is the excavator practical capacity in m^3 (Bank Measure)? Take the lower value for the bucket (dipper) fill factor.

- **Solution:**
- Based on Table 8.1, k = 1.0
- Based on a given table (conversion factor), f = 0.8 (from loose to bank measure).
- Then, capacity =

  2 cu yd*0.76(m3/cy)*0.8(f)*1.0(k) = 1.216 m^3 BM

EXCAVATORS: FRONT SHOVEL Productivity Factors

2. HEIGHT OF CUT

- Optimum height of cut is defined as the height that will result in a full dipper (bucket) in one pass.

- If the height of cut shallow, the bucket does not fill up in one pass. To solve this problem:

  a) Apply more pressure.

  b) Make two passes.

EXCAVATORS: FRONT SHOVEL
Productivity Factors

2. HEIGHT OF CUT

- If it is higher than the optimum, then, the bucket will be filled before pass completion. **To solve this problem:**

  a) Apply less pressure on the bucket.

  b) Dig upper part first, then, clean bottom part later.

EXCAVATORS: FRONT SHOVEL
Productivity Factors

2. HEIGHT OF CUT

- **Percent of optimum height (POH):**

$$\text{POH} = \frac{Actual\ height\ of\ cut * 100}{Optimum\ height\ of\ cut}$$

- **Optimum height = (30% - 50%) of max. digging height for the shovel.**

EXCAVATORS: FRONT SHOVEL Productivity Factors

2. HEIGHT OF CUT

- The optimum height is 30% of max. digging height for material that is easy to excavate and load, such as loam, sand, or gravel.
- The optimum height is 40% of the max. digging height for Common earth.
- The optimum height is 50% of the max. digging height for tough materials, such as stick clay or blasted rock.

EXCAVATORS: FRONT SHOVEL Productivity Factors

3. ANGLE OF SWING

- Angle of swing of a shovel is the horizontal angle, expressed in degrees, between the position of the bucket when it is excavating and the position where it discharges the load.
- The total cycle time includes digging, swing to the dumping position, dumping, and returning to the digging position.
- Increasing the swing angle will increase the cycle time and vice versa.

EXCAVATORS: FRONT SHOVEL
Productivity Factors

TABLE 8.2 | Factors for height of cut and angle of swing effect on shovel production

Percentage of optimum depth	Angle of swing (degrees)						
	45	60	75	90	120	150	180
40	0.93	0.89	0.85	0.80	0.72	0.65	0.59
60	1.10	1.03	0.96	0.91	0.81	0.73	0.66
80	1.22	1.12	1.04	0.98	0.86	0.77	0.69
100	1.26	1.16	1.07	1.00	0.88	0.79	0.71
120	1.20	1.11	1.03	0.97	0.86	0.77	0.70
140	1.12	1.04	0.97	0.91	0.81	0.73	0.66
160	1.03	0.96	0.90	0.85	0.75	0.67	0.62

EXCAVATORS: FRONT SHOVEL Productivity Factors

OTHER FACTORS

- Size of hauling units should be 5-6 times as large as shovel bucket volume.
- Conditions of the shovel itself has a very big effect on productivity.
- Operator skills plays a good role in affecting shovel productivity.
- Similarly, job & management conditions affects greatly the shovel productivity.

EXCAVATORS: FRONT SHOVEL Selection

The front shovel should be selected according to two major factors:

1. Excavated material cost per cubic yard:

a) Job size.

b) Transportation expenses.

c) Excavating and blasting cost.

d) Fixed costs.

e) Wages.

2. Job conditions in which the shovel will operate.

HINTS FOR EFFICIENT SHOVEL OPERATION

The effective use of a shovel is dependent upon conditions being suited to the machine and the machine being properly maintained. Operating and supervisory personnel ability to coordinate their efforts for starting the excavation, material disposal, and advance move planning contributes to efficiency.

The following points are listed as constructive suggestions for improving operating efficiency:

1. Swing should not be started until dipper clears the material.
2. Shovel should not be spotted too close to working face so the dipper retraction avoids striking the crawlers or boom.
3. Crowding too heavily slows up loading.
4. Dipper should not be placed on the ground and swung sideways to clean up loose material.
5. Boom angle should be changed to suit the loading and digging conditions. Banks should be cut in line with teeth.
6. Each individual cut should be made to handle the material required by the specific job with an eye toward aiding the hauling equipment and preventing lost motion.
7. Trucks and cars should be kept in positions that will prevent excessive swinging.
8. The floor of the cut should be kept smooth, even in borrow pit work. A shovel MUST have an even footing for maximum output.
9. The dipper teeth should be kept sharp. (Extra teeth should be purchased for replacements and interchanged while the worn ones are reconditioned.) Sharp points save cable and power; produce more dipper yardage.
10. The shovel should be moved up often enough to insure complete dipper fill each time and prevent digging with extension of handle too far beyond boom point.
11. In digging hard material the top should be taken off first, then the face worked down.
12. In digging blasted rock the face should be kept as nearly vertical as possible. Loose rocks will fall down away from the machine and not roll under the crawlers.
13. Pitch braces on dipper should be adjusted to cut bank or correct angles.
14. Ends of hoist cable should be reversed after reasonable service.
15. Extra cables should be kept on hand at all times.
16. Boom hoist cable should be examined regularly, especially the dead end socket.
17. Operators should watch to see that back of dipper is being filled.

Figure 3–7 Hints for efficient shovel operation. (Permission to reproduce this material has been granted by the Construction Industry Manufacturers Association (CIMA). CIMA assumes no responsibility for the accuracy of this reproduction.)

EXCAVATORS: FRONT SHOVEL

GENERAL OUPUT MODEL (GOM)

Hourly output (cy/hr or m3/hr) =

$$P = (3600 * Q * f * k * f_1 * f_2 * t)/CT$$

Where; k = bucket fill factor (Table 8.1).

P = productivity in cy/hr or m^3/hr.

Q = bucket capacity in loose cy or m^3.

f = earth volume change conversion factor.

f_1 = swing-depth factor (Table 8.2).

f_2 = job and management conditions.

t = operating time factor.

CT = cycle time in seconds.

EXCAVATORS FRONT SHOVEL Example 2

A hydraulic excavator excavating bank clay has a heaped capacity of 1.5 cu yd. Its maximum digging height is given by the manufacturer as 7 m. The average angle of swing is 120°. The average height of cut is 2.94 m. The operating time is expected to be 50 min per hr. Management and job conditions are assumed to be fair. What is the hourly rate of production in m^3bm/hr, if the shovel's cycle time is 19 seconds? Take the shovel's optimum height of cut as equal to 30% of its maximum digging height. Take the smallest applicable value for the bucket fill factor.

EXCAVATORS FRONT SHOVEL Example 2

Parameters in the GOB model:

Capacity: Q = 1.50 x 0.76 =1.14 m3 loose measure

Earth volume change conversion factor from loose to bm (from table in handouts): f = 0.79

Cycle time CT = 19 sec

Optimum height of cut = 7.00 x 0.30 = 2.10 m

Percent of optimum height: = 2.94 x 100 / 2.10 = 140%

Depth-swing factor (from table 8.2):

f_1 = 0.81

EXCAVATORS FRONT SHOVEL Example 2

Job and management efficiency factor (from table in the handouts): f2= 0.65

Bucket fill factor (from table 8.1): k = 1.00

Operating time factor: t = 50/60 = 0.83

Rate of output with GOM model:

P = (3600 *Q *f* K*f1*f2*t)/CT =

= (3,600*1.14*0.79*1.00*0.65*0.81*0.83)/19 =

= 74.57 m3 bm/hr.

EXCAVATORS FRONT SHOVEL
Example 3

2,300 m^3 of bulk pit excavation is composed of common earth. The excavation period given in the contract is 3 days. The contractor has to account for 20% bad weather and working time of 8 hrs/day. The average depth of cut is 3.00 m whereas the average angle of swing will be 60°. Job and management conditions are expected to be good. The operating time is 50 min/hr.

Excavator bucket capacity	Maximum digging heights	Estimated cycle times for this Job	Hourly costs of owning and operating
1.75 cy	10.0 m	24 sec	$35/hr
2.00 cy	13.0 m	25 sec	$40/hr
2.50 cy	14.5 m	26 sec	$45/hr
3.00 cy	15.5 m	27 sec	$50/hr

EXCAVATORS FRONT SHOVEL Example 3

- **Questions:**

1. Select the right size of power. The optimum height of cut in this operation that involves relatively soft material is to be taken as 30% of the maximum digging height of the excavator. Take the smallest applicable bucket fill factor (k).

2. What is the unit cost of excavation?

EXCAVATORS FRONT SHOVEL Example 3

- (3.1) Total working time = 3 days @ 8 hrs/day = 24 hours
- Net working time (excluding bad weather) = 24 hrs x 0.80 = 19.20 Hours
- Required hourly output = 2,300 m^3 / 19.20 hrs = 119.79 m^3 bm/hr

Using the GOM model:

- **Try 1.75 cu yd front shovel:**
  - Capacity: Q = 1.75 (cy) x 0.76 (m3/cy) =1.33 m^3 loose
  - Earth volume change conversion factor from loose to bm (from handouts): f = 0.80
  - Bucket fill factor (from table 8.1): K = 1.00
  - Optimum height of cut = 10.00x0.30 = 3.00 m
  - Percent of optimum height = 3.00 x 100 / 3.00 = 100%

EXCAVATORS FRONT SHOVEL Example 3

- Depth-swing factor (from table 8.2): f1 = 1.16
- Job and management efficiency factor (from handouts): f_2 = 0.75
- Operating time factor: t = 50/60 = 0.83
- <u>Rate of output with GOM model:</u>
- P = 3,600 * Q * f * K * f_1 * f_2 * t /CT =
- P = 3,600x1.33x0.80x1.00x1.16x0.75x0.83/24 = 115.25 m^3 bm/hr.
- Since the rate of output (115.25 m^3 bm/hr) does not satisfy the required rate of output (119.79 m^3 bm/hr), the 1 3/4 cu yd front shovel is not appropriate.

EXCAVATORS FRONT SHOVEL Example 3

- **Try 2.0 cu yd front shovel:**
- Capacity: Q = 2.00 x 0.76 =1.52 m^3 loose
- Earth volume change conversion factor from loose to bm (from handouts): f = 0.80
- Bucket fill factor (from table 8.1): K = 1.00
- Optimum height of cut = 13.00x0.30 = 3.90 m
- Percent of optimum height = 3.00 x 100 / 3.90 = 77%
- Depth-swing factor (from table 8.2): f_1 = 1.11
- Job and management efficiency factor (from handouts): f_2 = 0.75

EXCAVATORS FRONT SHOVEL Example 3

- Operating time factor: t = 50/60 = 0.83
- Rate of output with GOM model:
- $P = 3{,}600 * Q * f * K * f_1 * f_2 * t / CT =$
- $P = 3{,}600 \times 1.52 \times 0.80 \times 1.00 \times 1.11 \times 0.75 \times 0.83 / 25 = 120.99\ m^3$ bm/hr.
- **Since the rate of output (120.99 m^3 bm/hr) does satisfy the required rate of output (119.79 m^3 bm/hr), the 2.00 cu yd front shovel is appropriate.**
- (3.2)
- **Unit cost of operation =** 40 \$/hr / 120.99 m^3 bm/hr = \$0.33 per m^3 bm

Thank You