Arab Academy for Science, Technology & Maritime Transport
Colleague of Engineering & Technology
Construction & Building Engineering

CB 523
Methods and Equipment for Construction 1

Lecture 3:
Traditional Concrete Formworks

Instructor: Dr. Ahmed Elyamany

Courtesy of Dr. Ahmed Alhady

Agenda

- **Quick Review**
- **General Requirements for Formwork**
- **Typical Formwork**
- **Concrete Formwork Design**

Quick Review

CONVENTIONAL (TRADITIONAL FORMWORK)

- **CONVENTIONAL** (TRADITIONAL FORMWORK):
  - The formwork is built on site out of timber and plywood.
  - It is easy to produce but time-consuming for larger structures, and the plywood facing has a relatively short lifespan.
  - It is still used extensively when the labour costs are lower than the costs for procuring reusable formwork.
  - It is also the most flexible type of formwork, so even where other systems are in use, complicated sections may use it.

General Requirements for Formwork

- **The principal requirements for concrete formwork are that it be safe, economic, and produce the desired shape and surface texture.**

- **Procedures for designing formwork that will be safe under the loads imposed by concrete, workers and other live loads, and extremal forces (such as wind loads) should be followed.**

- **Construction procedures relating to formwork safety should be applied.**

- **Requirements for the shape (including deflection limitations) and surface texture of the finished concrete are normally contained in the construction plans and specifications.**

- **Since the cost of concrete formwork often exceeds the cost of the concrete itself, the necessity for economy in formwork is readily apparent.**

Typical Formwork
Walls

- **A typical wall form with its components is illustrated in the Figure.**
- **Sheathing may be either plywood or lumber.**
- **Double wales are often used as illustrated so that form ties may be inserted between the two wales.**
- **With a single wale it would be necessary to drill the wales for tie insertion.**
- **While the pressure of the plastic concrete is resisted by form ties, bracing must be used to prevent form movement and to provide support against wind loads or other lateral loads.**
- **After completing one side of formwork reinforcement is provided at the place then the second side formwork is provided**

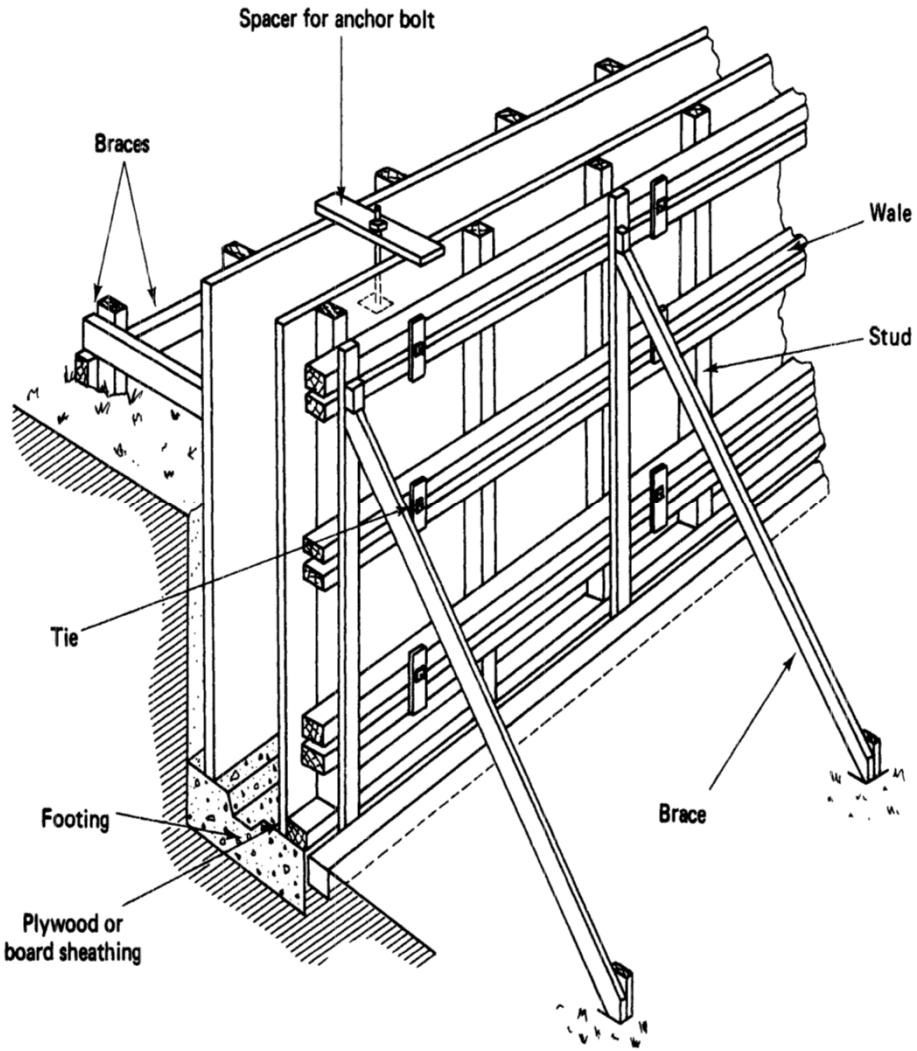

Typical Formwork

Form Ties

- **Form ties may incorporate a spreader device to maintain proper spacing between form walls until the concrete is placed. Otherwise, a removable spreader bar must be used for this purpose.**
- **Ties are of two principal types, continuous single-member and internally disconnecting.**
  - **Continuous single-member ties may be pulled out after the concrete has hardened or they may be broken off at a weakened point just below the surface after the forms are removed.**
  - **Common types of internally disconnecting ties include the coil tie and stud rod (or she- bolt) tie. With internally disconnecting ties, the ends are unscrewed to permit form removal with the internal section left embedded in the concrete.**
  - **The holes remaining in the concrete surface after the ends of the ties are removed are later grouted.**

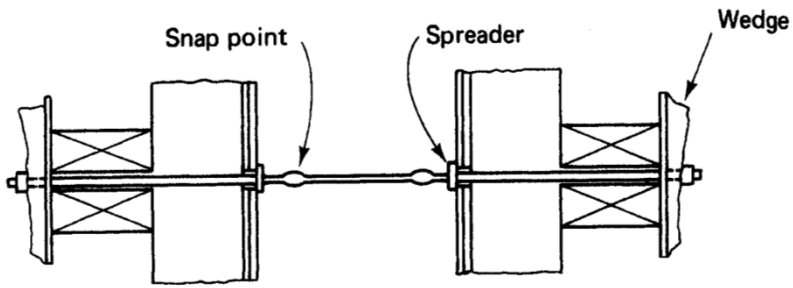

Snap tie with washer spreader

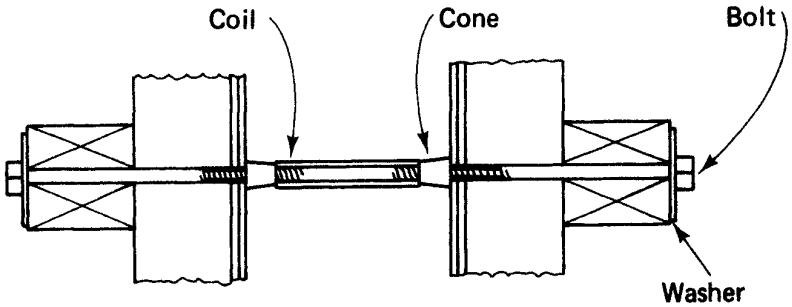

Coil tie with cone spreader

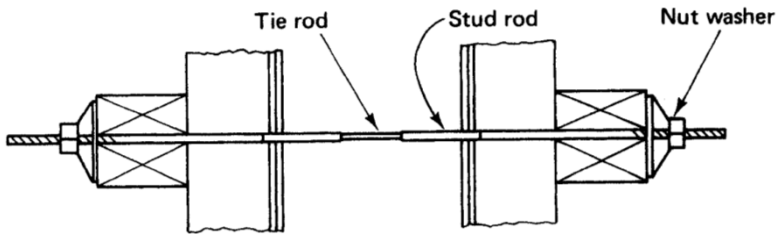

Typical Formwork

Columns

- **Column forms are similar to Wall forms except that studs and wales are replaced by column clamps or yokes that resist the internal concrete pressure.**
- **A typical column form is shown in the Figure.**
- **Yokes may be fabricated of wood, wood and bolts (as shown), or of metal.**
- **Commercial column clamps (usually of metal) are available in a wide range of sizes.**
- **Round columns are formed with ready-made fiber tubes or steel reinforced fiberglass forms.**
- **Openings or "windows" may be provided at several elevations in high, narrow forms to facilitate placement of concrete.**
- **Special fittings may also be inserted near the bottom of vertical forms to permit pumping concrete into the form from the bottom.**

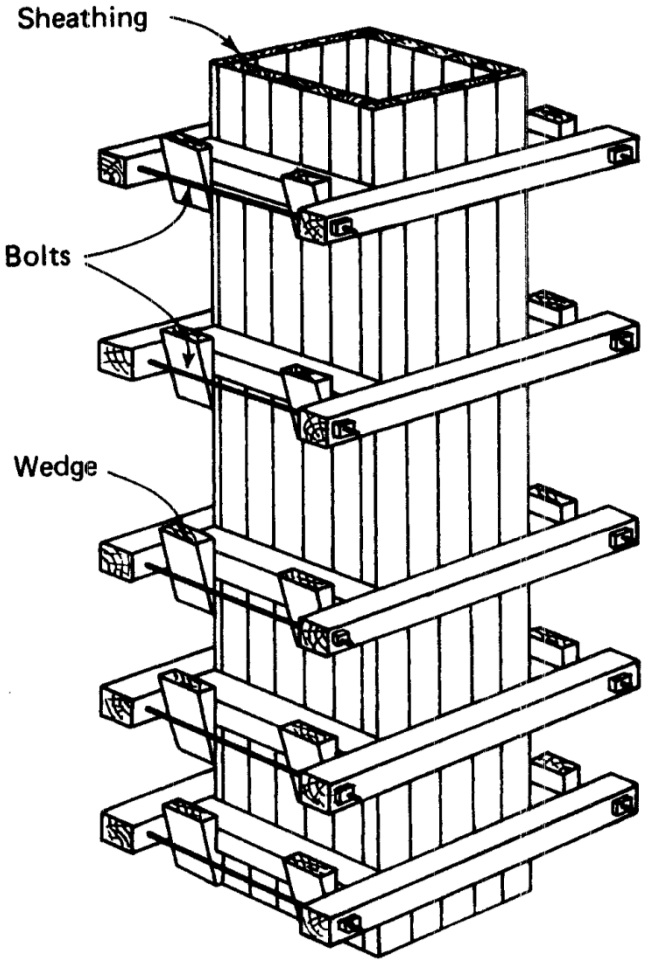

Typical Formwork

Slabs

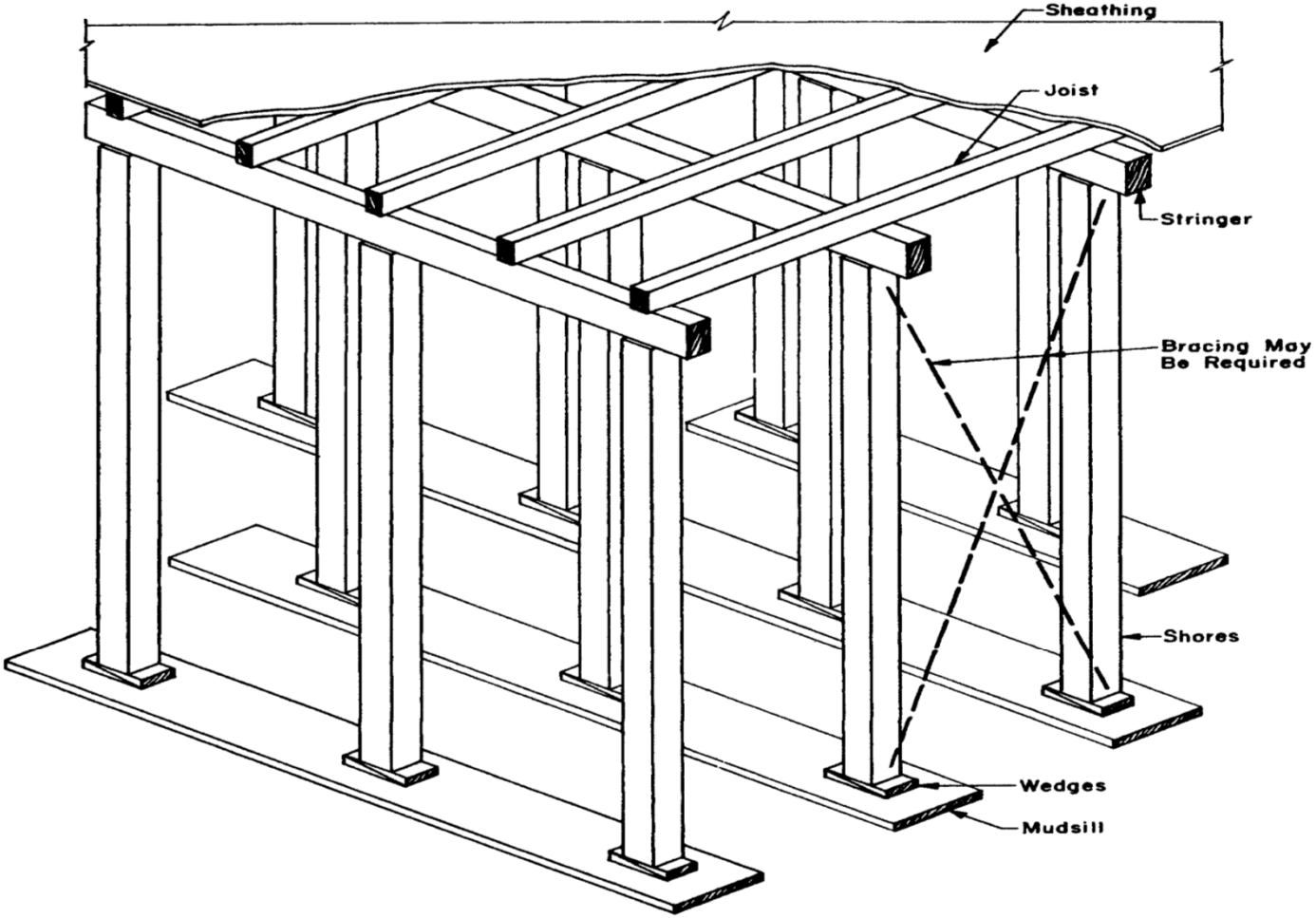

Figure 12–21 Form for elevated slab. (Courtesy of American Concrete Institute)

Typical Formwork

Slabs

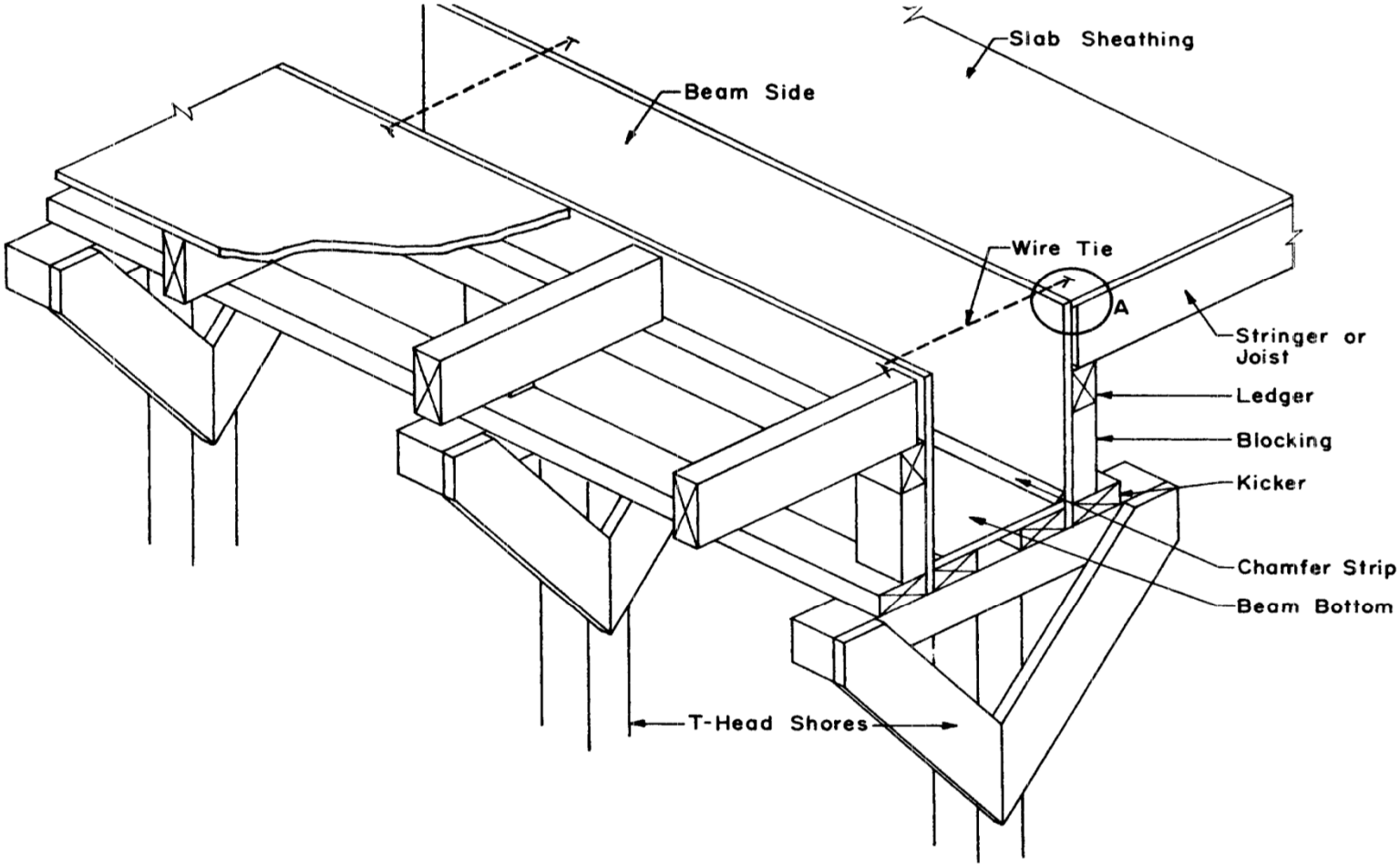

Figure 12–22 Beam and slab form. (Courtesy of American Concrete Institute)

قطاع رأسي في الشدة الخشبية لسقف

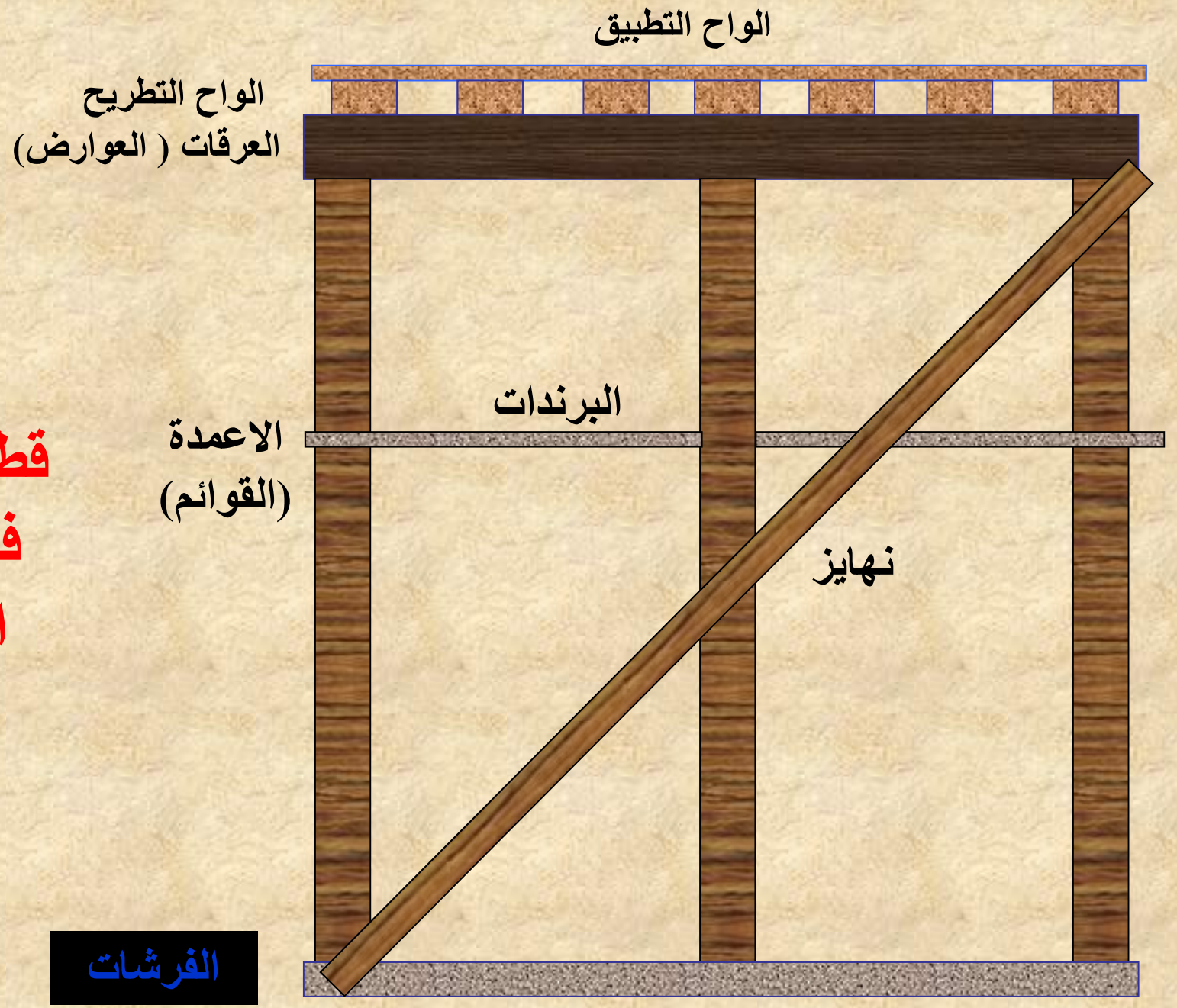

Typical Formwork

الشدة الخشبية لسقف و كمرة عمود و سلم خرسانة

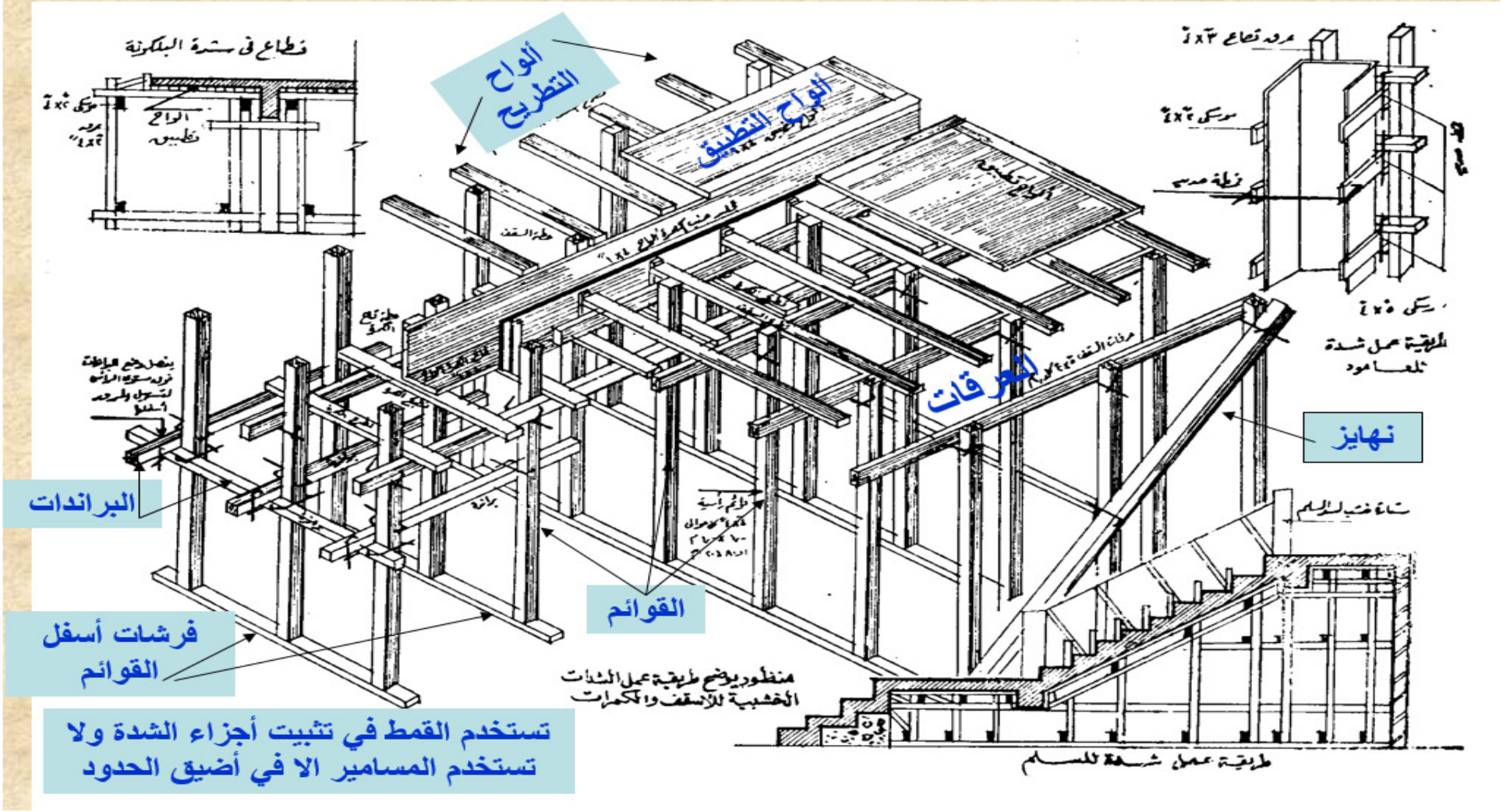

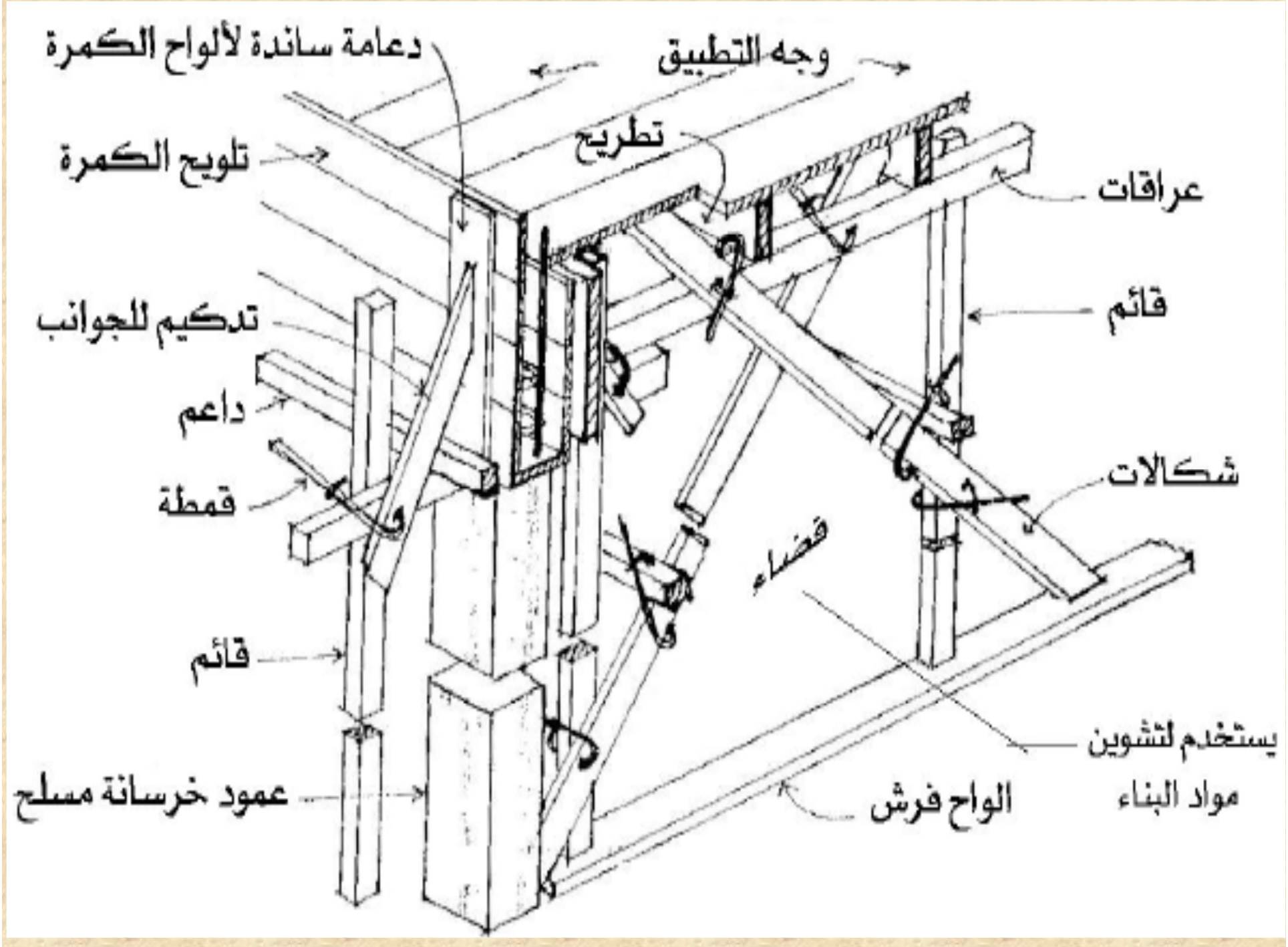
دعامة ساندة لألواح الكمرة
وجه التطبيق
تطريح
تلويح الكمرة
عراقات
قائم
تدكيم للجوانب
داعم
شكالات
قمطة
فضاء
قائم
يستخدم لتشوين
مواد البناء
عمود خرسانة مسلح
الواح فرش

شكل رقم (٢٤) يبين استخدام العروق الفليري كفرشات أسفل القوائم الرأسية بالدور الأرضي

١ -الفرشات

٢ - القوائم الرأسية

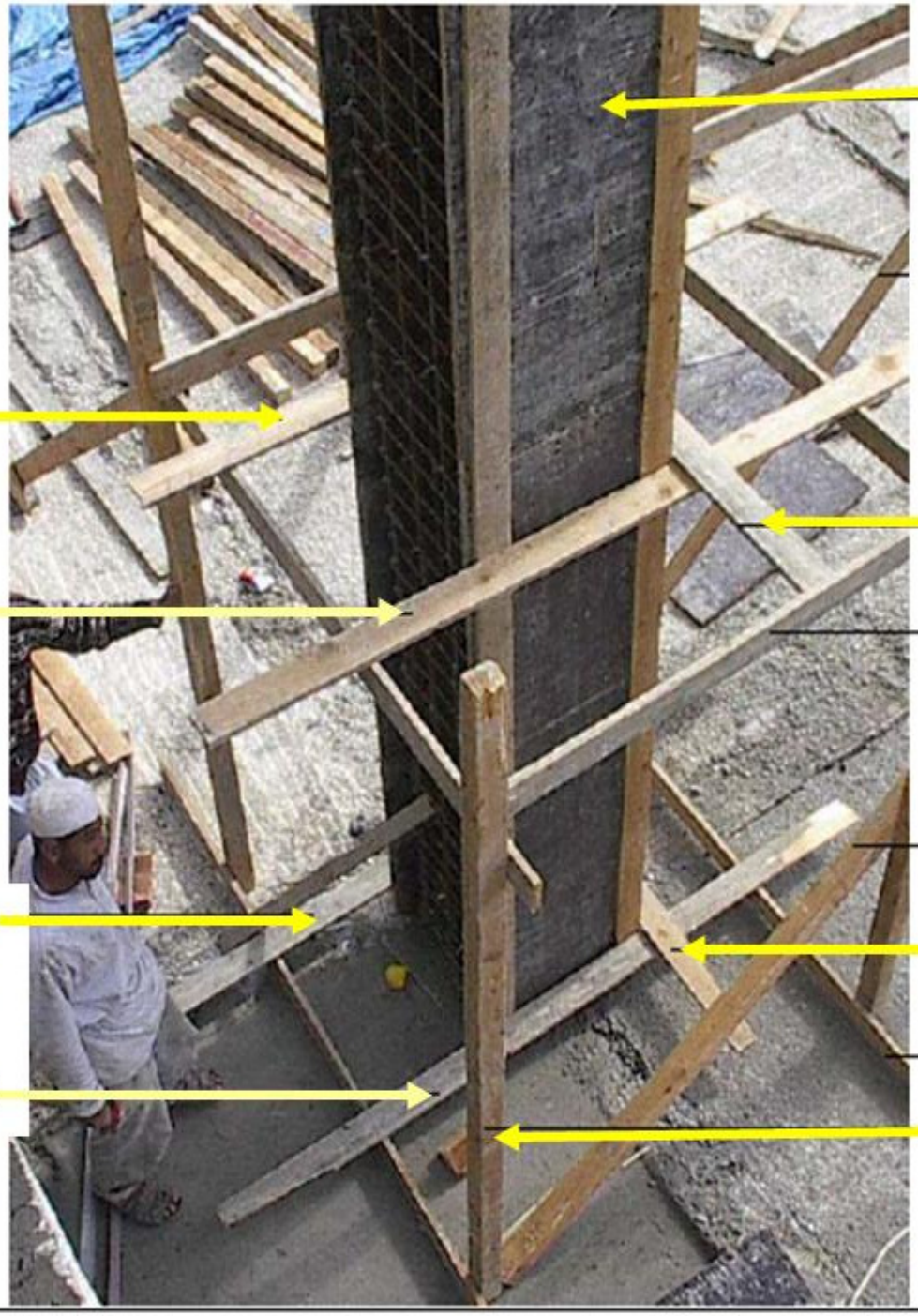
جنب العمود
الحطة العلوية
لتحديد ظهر
العمود
الحطة العلوية
لتحديد اتجاه
وطول العمود
٤
٧
الحطة السفلية
لتحديد ظهر
العمود
الحطة السفلية
لتحديد اتجاه
وطول العمود
٣
قوائم رأسية

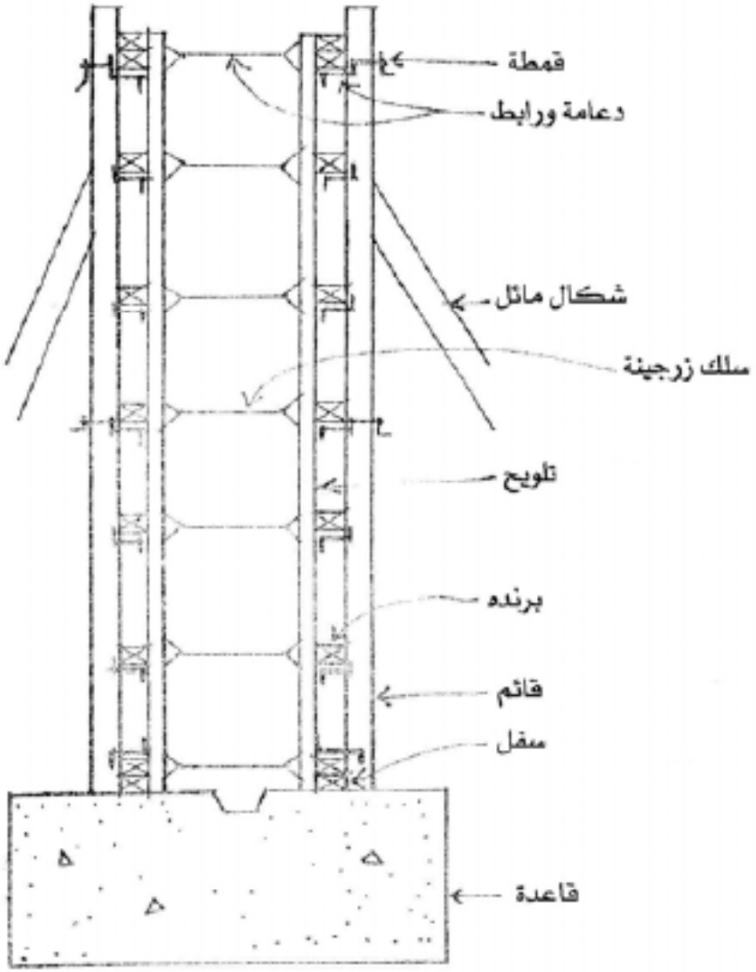

قطاع يوضح طريقة اخرى لصنع شدة الحائط

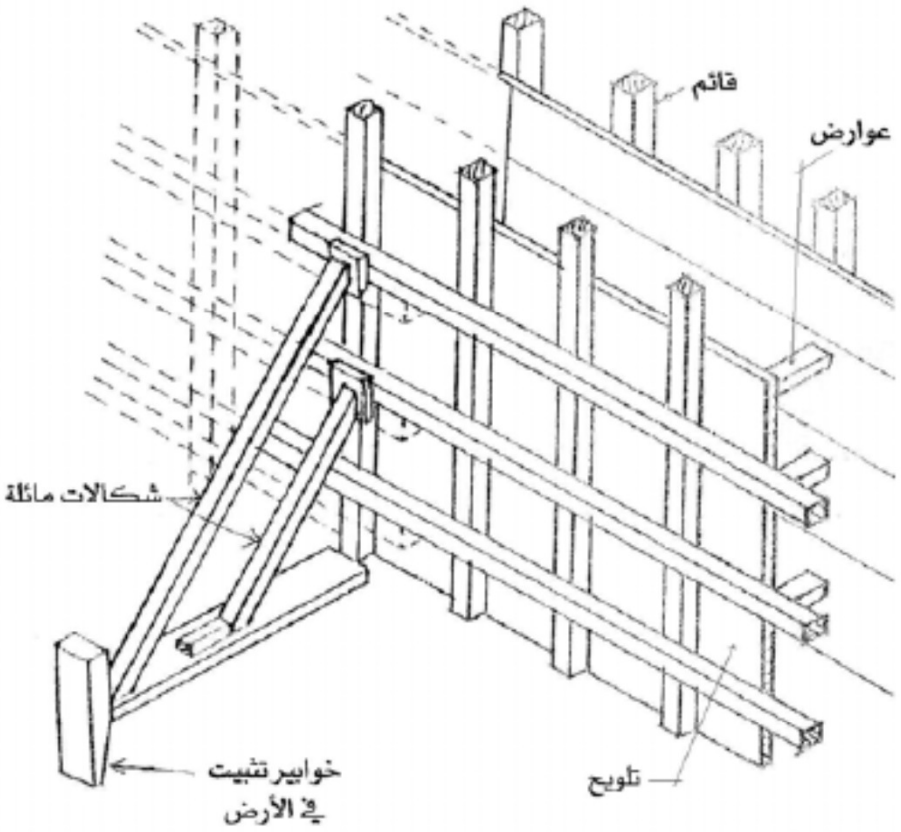

منظور لطريقة صنع شدة حائط

شكل رقم (٢٩) يبين العرقات في الشدة الخشبية بالسقف

١ - العرقات ٢ - التطاريح ٣ - التطبيق

Concrete Formwork Design

DESIGN PRINCIPLES

- **The design of concrete formwork that has adequate strength to resist failure and will not deflect excessively when the forms are filled is a problem in structural design.**
- **Unless commercial forms are used, this will usually involve the design of wall, column, or slab forms constructed of wood or plywood.**
- **In such cases. after the design loads have been established, each of the primary form components may be analyzed as a beam to determine the maximum bending and shear stresses and the maximum deflection that will occur.**
- **Vertical supports and lateral bracing are then analyzed for compression and tension loads.**
- **The procedures and applicable equations are presented in the coming slides**

DESIGN LOADS

Wall and Column Forms

- **For vertical forms (wall and column) forms, design load composed of the lateral pressure of the concrete against the forms.**

- **The maximum lateral pressure that the concrete exerts against a form has been found to be a function of the unit weight of the concrete, cement type or blend, temperature of the concrete, vertical rate of placing, and the height of the form.**

- **For ordinary internally vibrated concrete, the American Concrete Institute (AC1) recommends the use of the following formulas to determine the design lateral concrete pressure.**

DESIGN LOADS

Wall and Column Forms

For all columns and for walls with a vertical rate of placement less than 7 ft/h (2.1 m/h) and a placement height of 14 ft (4.3m) or less:

$$p = C_w C_c \left(150 + \frac{9000\,R}{T}\right) \qquad \textbf{(13–1A)}$$

$$\left[p = C_w C_c \left(7.2 + \frac{785\,R}{T + 18}\right)\right] \qquad \textbf{(13–1B)}$$

where: C_w = unit weight coefficient (Table 13–1)
C_c = chemistry coefficient (Table 13–2)
p = lateral pressure (lb/sq ft or kPa)
R = rate of vertical placement (ft/h or m/h)
T = concrete temperature (°F or °C)
h = height of form (ft or m)
w = unit weight of concrete (lb/cu ft or kg/m^3)

Minimum pressure = 600 C_w lb/sq ft (28.7 C_w kPa)
Maximum pressure = wh

DESIGN LOADS

Wall and Column Forms

For walls with a vertical rate of placement of 7 to 15 ft/h (2.1 to 4.6 m/h) and walls with a rate of placement less than 7 ft/h (2.1 m/h) whose placement height exceeds 14ft (4.3 m):

$$p = C_w C_c \left(150 + \frac{43{,}400}{T} + \frac{2800\,R}{T}\right) \qquad \textbf{(13–2A)}$$

$$\left[p = C_w C_c \left(7.2 + \frac{1154}{T + 18} + \frac{244\,R}{T + 18}\right)\right] \qquad \textbf{(13–2B)}$$

Minimum pressure $= 600\,C_w$ lb/sq ft $(28.7\,C_w$ kPa$)$
Maximum pressure $= wh$

DESIGN LOADS

Wall and Column Forms

Table 13–1 Concrete unit weight coefficient (Courtesy of American Concrete Institute)

Unit Weight of Concrete	C_w
Under 140 lb/cu ft	$0.5\left(1 + \frac{w}{145}\right)$ but at least 0.80
[Under 2243 kg/m^3	$0.5\left(1 + \frac{w}{2323}\right)$ but at least 0.80]
140 to 150 lb/cu ft	1.0
[2243 to 2403 kg/m^3	1.0]
Over 150 lb/cu ft	$\left(\frac{w}{145}\right)$
[Over 2403 kg/m^3	$\left(\frac{w}{2323}\right)$]

DESIGN LOADS

Wall and Column Forms

Table 13–2 Concrete chemistry coefficient (Courtesy of American Concrete Institute)

Cement Type or Blend	C_c
Type I, II, or III without retarders	1.0
Type I, II, or III with a retarder	1.2
Other blends containing less than 70% slag or 40% fly ash without retarders	1.2
Other blends containing less than 70% slag or 40% fly ash with a retarder	1.4
Blends containing more than 70% slag or 40% fly ash	1.4

DESIGN LOADS

Wall and Column Forms

For walls with a vertical rate of placement greater than 15 ft/h (4.6 m/h) or when the forms will be filled before the concrete stiffens:

$$p = wh \tag{13–3}$$

When forms are vibrated externally, it is recommended that a design load twice that given by Equations 13–1 and 13–2 be used. When concrete is pumped into vertical forms from the bottom (both column and wall forms), Equation 13–3 should be used and a minimum additional pressure of 25% should be added to allow for pump surge pressure.

DESIGN LOADS

Floor and Roof Slab Forms

- **The design load to be used for elevated slabs consists of the weight of concrete and reinforcing steel, the weight of the forms themselves, and any live loads (equipment, workers, material, etc.).**
- **For normal reinforced concrete, the design load for concrete and steel is based on a unit weight of 150 lb/cu ft (2403 kg/m^3).**
- **The American Concrete Institute (ACI) recommends that a minimum live load of 50 lb/sq ft (2.4 kPa) be used for the weight of equipment, materials, and workers.**
- **When motorized concrete buggies are utilized, the live load should be increased to at least 75 lb/sq ft (3.6 kPa).**
- **Any unusual loads would be in addition to these values.**
- **ACI also recommends that a minimum design load (dead load plus live load) of 100 lb/sq ft (4.8 kPa) be used. This should be increased to 125 lb/sq ft (6.0 kPa) when motorized buggies are used.**
- **Note: (1 kg/m^2 = 0.0098 kPa), (Pa= N/m^2)**

DESIGN LOADS

Lateral Loads

- **Formwork must be designed to resist lateral loads such as those imposed by wind, the movement of equipment on the forms, and the placing of concrete into the forms.**

- **Such forces are usually resisted by lateral bracing whose design is coming later.**

- **The minimum lateral design loads recommended for tied wall forms are given in Table 13-3.**

- **When form ties are not used, bracing must be designed to resist the internal concrete pressure as well as external loads.**

DESIGN LOADS

Lateral Loads

Table 13–3 Recommended minimum lateral design load for wall forms

Wall Height, *h* (ft) [m]	Design Lateral Force Applied at Top of Form (lb/ft) [kN/m]
less than 8 [2.4]	$\frac{h \times wf^*}{2}$
8 [2.4] or over but less than 22 [6.7]	100 [1.46] but at least $\frac{h \times wf^*}{2}$
22 [6.7] or over	7.5 *h* [0.358 *h*] but at least $\frac{h \times wf^*}{2}$

**wf* = wind force prescribed by local code (lb/sq ft) [kPa] but minimum of 15 lb/sq ft [0.72 kPa]

DESIGN LOADS

Lateral Loads

For slab forms, the minimum lateral design load is expressed as follows:

$$H = 0.02 \times dl \times ws \qquad \textbf{(13–4)}$$

where H = lateral force applied along the edge of the slab (lb/ft) [kN/m];
minimum value = 100 lb/ft [1.46 kN/m]
dl = design dead load (lb/sq ft) [kPa]
ws = width of slab perpendicular to form edge (ft) [m]

In using Equation 13–4, design dead load includes the weight of concrete plus formwork. In determining the value of ws, consider only that part of the slab being placed at one time.

Consider *ws* is the longest edge length as a worst case.

METHOD OF ANALYSIS

Basis of Analysis

- **After appropriate design loads have been selected, the sheathing, joists or studs, and stringers or Wales are analyzed in turn for bending, shear, and deflection, considering each member to be a <u>uniformly loaded beam</u> supported in one of three conditions *(single-span, two-span, or three-span or larger)*.**

- **Vertical supports and lateral bracing must be checked for compression and tension stresses.**

- **Except for sheathing, bearing stresses must he checked at supports to ensure against crushing.**

- **Using the methods of engineering mechanics, the maximum values expressed in customary units of bending moment, shear, and deflection developed in a uniformly loaded, simply supported beam of uniform cross section are given in Table 13-4.**

METHOD OF ANALYSIS

Basis of Analysis

Table 13–4 Maximum bending, shear, and deflection in a uniformly loaded beam

Type	Support Conditions		
	1 Span	*2 Spans*	*3 Spans*
Bending moment (in.-lb)	$M = \frac{wl^2}{96}$	$M = \frac{wl^2}{96}$	$M = \frac{wl^2}{120}$
Shear (lb)	$V = \frac{wl}{24}$	$V = \frac{5wl}{96}$	$V = \frac{wl}{20}$
Deflection (in.)	$\Delta = \frac{5wl^4}{4608EI}$	$\Delta = \frac{wl^4}{2220EI}$	$\Delta = \frac{wl^4}{1740EI}$

Notation:
l = length of span (in.)
w = uniform load per foot of span (lb/ft)
E = modulus of elasticity (psi)
I = moment of inertia (in.^{4})

METHOD OF ANALYSIS

Basis of Analysis

The maximum fiber stresses (expressed in conventional units) developed in bending, shear, and compression resulting from a specified load may be determined from the following equations:

Bending

$$f_b = \frac{M}{S} \tag{13–5}$$

Shear

$$f_v = \frac{1.5V}{A} \text{ for rectangular wood members} \tag{13–6}$$

$$f_v = \frac{V}{Ib/Q} \text{ for plywood} \tag{13–7}$$

Compression

$$f_c \text{ or } f_{c\perp} = \frac{P}{A} \tag{13–8}$$

Tension

$$f_t = \frac{P}{A} \tag{13–9}$$

where f_b = actual unit stress for extreme fiber in bending (psi)
f_c = actual unit stress in compression parallel to grain (psi)
$f_{c\perp}$ = actual unit stress in compression perpendicular to grain (psi)
f_t = actual unit stress in tension (psi)

f_v = actual unit stress in horizontal shear (psi)
A = section area (sq in.)
M = maximum moment (in.-lb)
P = concentrated load (lb)
S = section modulus (cu in.)
V = maximum shear (lb)
Ib/Q = rolling shear constant (sq in./ft)

METHOD OF ANALYSIS

Basis of Analysis

- **Since the grain of a piece of timber runs parallel to its length, axial compressive forces result in unit compressive stresses parallel to the grain. Thus, a compression force in a formwork brace will result in unit compressive stresses parallel to the grain (fc) in the member.**

- **Loads applied to the top or sides of a beam, such as a joist resting on a stringer (Figure l3—lb), will result in unit compressive stresses perpendicular to the grain (fc⊥) in the beam.**

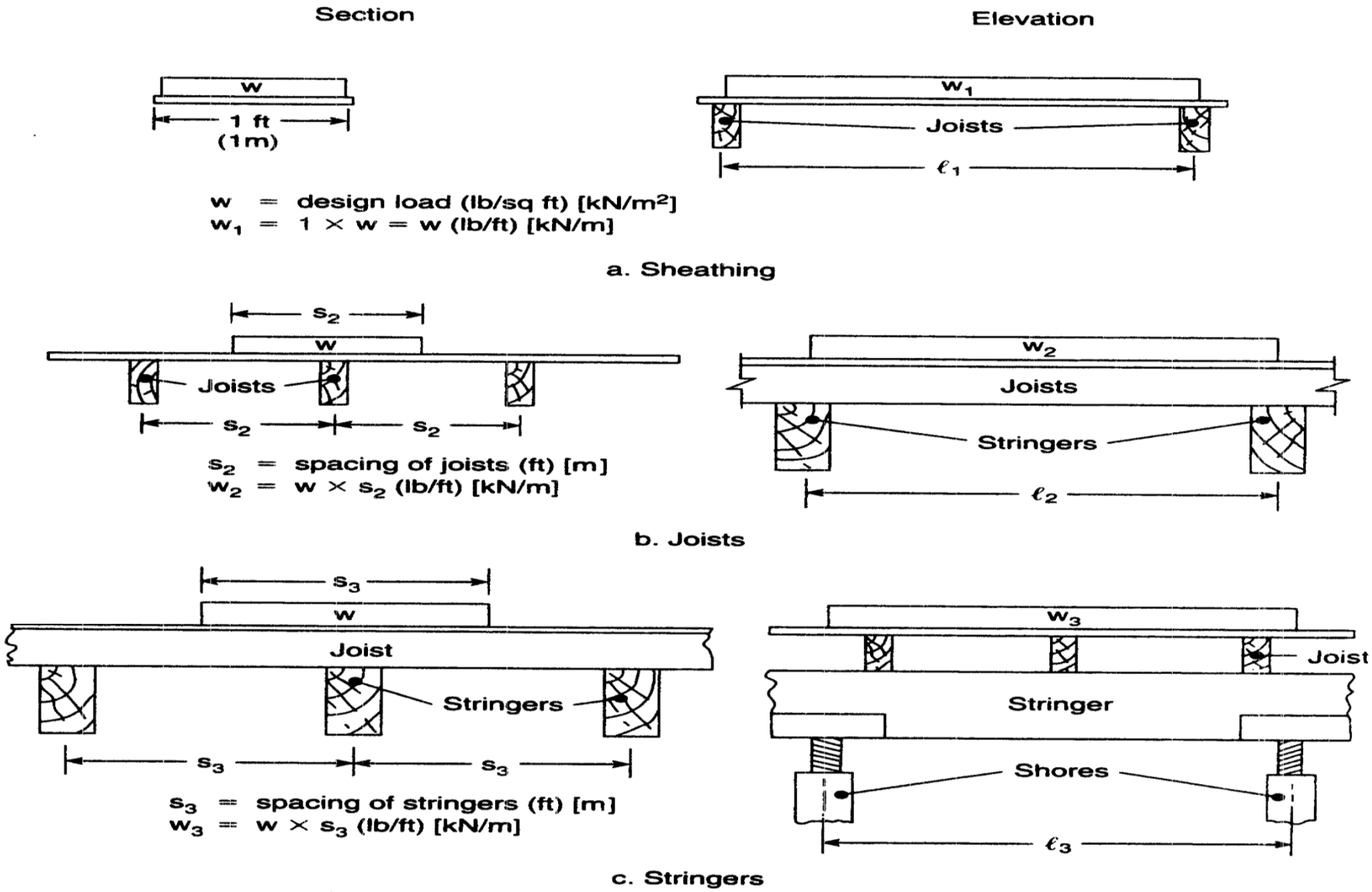

Figure 13–1 Design analysis of form members.

METHOD OF ANALYSIS

Basis of Analysis

- **Equating allowable unit stresses in bending and shear to the maximum (actual) unit stresses developed in a beam subjected to a uniform load of w pounds per linear foot [kN/m] yields the bending and shear equations of Tables 13-5 and l3-5A for calculating (L).**

Table 13–5 Concrete form design equations

Design Condition	Support Conditions: *1 Span*	*2 Spans*	*3 or More Spans*
Bending			
Wood	$\ell = 4.0d\left(\frac{F_b b}{w}\right)^{1/2}$	$\ell = 4.0d\left(\frac{F_b b}{w}\right)^{1/2}$	$\ell = 4.46d\left(\frac{F_b b}{w}\right)^{1/2}$
	$\ell = 9.8\left(\frac{F_b S}{w}\right)^{1/2}$	$\ell = 9.8\left(\frac{F_b S}{w}\right)^{1/2}$	$\ell = 10.95\left(\frac{F_b S}{w}\right)^{1/2}$
Plywood	$\ell = 9.8\left(\frac{F_b KS}{w}\right)^{1/2}$	$\ell = 9.8\left(\frac{F_b KS}{w}\right)^{1/2}$	$\ell = 10.95\left(\frac{F_b KS}{w}\right)^{1/2}$
Shear			
Wood	$\ell = 16\,\frac{F_v A}{w} + 2d$	$\ell = 12.8\,\frac{F_v A}{w} + 2d$	$\ell = 13.3\,\frac{F_v A}{w} + 2d$
Plywood	$\ell = 24\,\frac{F_s Ib/Q}{w} + 2d$	$\ell = 19.2\,\frac{F_s Ib/Q}{w} + 2d$	$\ell = 20\,\frac{F_s Ib/Q}{w} + 2d$
Deflection	$\ell = 5.51\left(\frac{EI\Delta}{w}\right)^{1/4}$	$\ell = 6.86\left(\frac{EI\Delta}{w}\right)^{1/4}$	$\ell = 6.46\left(\frac{EI\Delta}{w}\right)^{1/4}$
If $\Delta = 1/180$	$\ell = 1.72\left(\frac{EI}{w}\right)^{1/3}$	$\ell = 2.31\left(\frac{EI}{w}\right)^{1/3}$	$\ell = 2.13\left(\frac{EI}{w}\right)^{1/3}$
If $\Delta = 1/240$	$\ell = 1.57\left(\frac{EI}{w}\right)^{1/3}$	$\ell = 2.10\left(\frac{EI}{w}\right)^{1/3}$	$\ell = 1.94\left(\frac{EI}{w}\right)^{1/3}$
If $\Delta = 1/360$	$\ell = 1.37\left(\frac{EI}{w}\right)^{1/3}$	$\ell = 1.83\left(\frac{EI}{w}\right)^{1/3}$	$\ell = 1.69\left(\frac{EI}{w}\right)^{1/3}$
Compression	f_c or $f_{c\perp} = \frac{P}{A}$		
Tension	$f_t = \frac{P}{A}$		

Notation:

ℓ = length of span, center to center of supports (in.)
F_b = allowable unit stress in bending (psi)
$F_b KS$ = plywood section capacity in bending (lb × in./ft)
F_c = allowable unit stress in compression parallel to grain (psi)
$F_{c\perp}$ = allowable unit stress in compression perpendicular to grain (psi)
$F_s Ib/Q$ = plywood section capacity in rolling shear (lb/ft)
F_v = allowable unit stress in horizontal shear (psi)
f_c = actual unit stress in compression parallel to grain (psi)
$f_{c\perp}$ = actual unit stress in compression perpendicular to grain (psi)
f_t = actual unit stress in tension (psi)
A = area of section (in.^{2})*
E = modulus of elasticity (psi)
I = moment of inertia (in.^{4})*
EI = plywood stiffness capacity (kPamm^4/m)
P = applied force (compression or tension) (lb)
S = section modulus (in.^{3})*
Δ = deflection (in.)
b = width of member (in.)
d = depth of member (in.)
w = uniform load per foot of span (lb/ft)

*For a rectangular member: $A = bd$, $S = bd^2/6$, $I = bd^3/12$

Table 13–5A Metric (SI) concrete form design equations

Design Conditions	Support Conditions: *1 Span*	*2 Spans*	*3 or More Spans*
Bending			
Wood	$\ell = \frac{36.5}{1000} d \left(\frac{F_b b}{w}\right)^{1/2}$	$\ell = \frac{36.5}{1000} d \left(\frac{F_b b}{w}\right)^{1/2}$	$\ell = \frac{40.7}{1000} d \left(\frac{F_b b}{w}\right)^{1/2}$
	$\ell = \frac{89.9}{1000} \left(\frac{F_b S}{w}\right)^{1/2}$	$\ell = \frac{89.9}{1000} \left(\frac{F_b S}{w}\right)^{1/2}$	$\ell = \frac{100}{1000} \left(\frac{F_b S}{w}\right)^{1/2}$
Plywood	$\ell = 2.83 \left(\frac{F_b KS}{w}\right)^{1/2}$	$\ell = 2.83 \left(\frac{F_b KS}{w}\right)^{1/2}$	$\ell = 3.16 \left(\frac{F_b KS}{w}\right)^{1/2}$
Shear			
Wood	$\ell = \frac{1.34}{1000} \frac{F_v A}{w} + 2d$	$\ell = \frac{1.07}{1000} \frac{F_v A}{w} + 2d$	$\ell = \frac{1.11}{1000} \frac{F_v A}{w} + 2d$
Plywood	$\ell = 2.00 \frac{F_s Ib/Q}{w} + 2d$	$\ell = 1.60 \frac{F_s Ib/Q}{w} + 2d$	$\ell = 1.67 \frac{F_s Ib/Q}{w} + 2d$
Deflection	$\ell = \frac{526}{1000} \left(\frac{EI\Delta}{w}\right)^{1/4}$	$\ell = \frac{655}{1000} \left(\frac{EI\Delta}{w}\right)^{1/4}$	$\ell = \frac{617}{1000} \left(\frac{EI\Delta}{w}\right)^{1/4}$
If $\Delta = \frac{1}{180}$	$\ell = \frac{75.1}{1000} \left(\frac{EI}{w}\right)^{1/3}$	$\ell = \frac{101}{1000} \left(\frac{EI}{w}\right)^{1/3}$	$\ell = \frac{93.0}{1000} \left(\frac{EI}{w}\right)^{1/3}$
If $\Delta = \frac{1}{240}$	$\ell = \frac{68.5}{1000} \left(\frac{EI}{w}\right)^{1/3}$	$\ell = \frac{91.7}{1000} \left(\frac{EI}{w}\right)^{1/3}$	$\ell = \frac{84.7}{1000} \left(\frac{EI}{w}\right)^{1/3}$
If $\Delta = \frac{1}{360}$	$\ell = \frac{59.8}{1000} \left(\frac{EI}{w}\right)^{1/3}$	$\ell = \frac{79.9}{1000} \left(\frac{EI}{w}\right)^{1/3}$	$\ell = \frac{73.8}{1000} \left(\frac{EI}{w}\right)^{1/3}$
Compression	f_c or $f_{c\perp} = \frac{P}{A}$		
Tension	$f_t = \frac{P}{A}$		

Notation:

ℓ = length of span, center to center of supports (mm)
F_b = allowable unit stress in bending (kPa)
F_bKS = plywood section capacity in bending (Nmm/m)
F_c = allowable unit stress in compression parallel to grain (kPa)
$F_{c\perp}$ = allowable unit stress in compression perpendicular to grain (kPa)
F_sIb/Q = plywood section capacity in rolling shear (N/m)
f_v = allowable unit stress in horizontal shear (kPa)
f_c = actual unit stress in compression parallel to grain (kPa)
$f_{c\perp}$ = actual unit stress in compression perpendicular to grain (kPa)
f_t = actual unit stress in tension (kPa)
A = area of section (mm^2)*
E = modulus of elasticity (kPa)
I = moment of inertia (mm^4)*
EI = plywood stiffness capacity ($kPamm^4/m$)
P = applied force (compression or tension) (N)
S = section modulus (mm^3)*
Δ = deflection (mm)
b = width of member (mm)
d = depth of member (mm)
w = uniform load per meter of span (kPa/m)

*For a rectangular member: $A = bd$, $S = bd^2/6$, $I = bd^3/12$

METHOD OF ANALYSIS

Basis of Analysis

- **When design load and beam section properties have been specified, previous equations may be solved directly for the maximum allowable span.**

- **Given a design load and span length, the equations may be solved for the required size of the member.**

- **Design properties for Plyform® (plywood especially engineered for use in concrete formwork) are given in Table 13-6 and section properties for dimensioned lumber and timber are given in Table 13-7.**

Plywood Orientation

Weak Orientation of Plywood

(Face grain parallel to span)

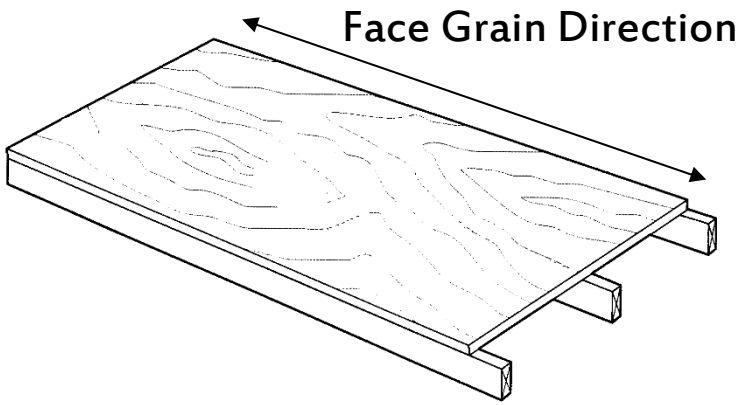

Strong Orientation of Plywood

(Face grain perpendicular to span)

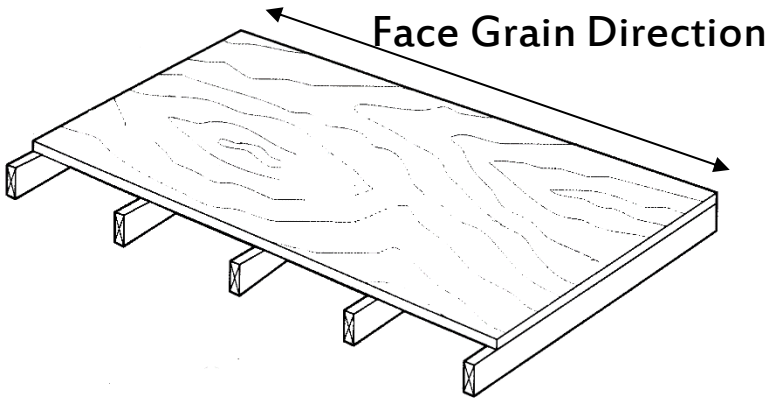

Table 13-6 Section properties of plywood.* (Created by author with data from APA—the Engineered Wood Assn.)

Thickness in. (mm)	Approx. Weight psf (kg/m²)	Face Grain Across Supports			Face Grain Parallel to Supports		
		EI	F_bKS	F_slb/Q	EI	F_bKS	F_slb/Q
		$10^6 \frac{lbin.^2}{ft}$	$10^3 \frac{lbin.}{ft}$	$10^3 \frac{lb}{ft}$	$10^4 \frac{lbin.^2}{ft}$	$10^3 \frac{lbin.}{ft}$	$10^3 \frac{lb}{ft}$
		$10^9 \frac{kPamm^4}{m}$	$10^3 \frac{Nmm}{m}$	$10^3 \frac{N}{m}$	$10^9 \frac{kPamm^4}{m}$	$10^3 \frac{Nmm}{m}$	$10^3 \frac{N}{m}$
Plyform Class I							
½ (12.7)	1.5 (7.3)	0.116 (1087)	0.517 (191)	0.371 (5.41)	0.036 (339)	0.251 (93)	0.197 (2.88)
⅝ (15.9)	1.8 (8.8)	0.195 (1836)	0.691 (256)	0.412 (6.01)	0.057 (537)	0.338 (125)	0.223 (3.25)
¾ (19.1)	2.2 (10.7)	0.298 (2810)	0.878 (326)	0.517 (7.55)	0.138 (1299)	0.591 (219)	0.293 (4.27)
⅞ (22.2)	2.6 (12.7)	0.444 (4180)	1.127 (418)	0.616 (8.99)	0.226 (2132)	0.814 (302)	0.434 (6.33)
1 (25.4)	3.0 (14.6)	0.641 (6030)	1.422 (527)	0.675 (9.85)	0.405 (3813)	1.224 (454)	0.505 (7.37)
1⅛ (28.6)	3.3 (16.1)	0.831 (7824)	1.639 (607)	0.751 (10.96)	0.597 (5621)	1.542 (572)	0.606 (8.85)
Plyform Class II							
½ (12.7)	1.5 (7.3)	0.097 (918)	0.355 (132)	0.352 (5.14)	0.026 (245)	0.222 (82.3)	0.196 (2.87)
⅝ (15.9)	1.8 (8.8)	0.169 (1591)	0.475 (176)	0.403 (5.88)	0.042 (392)	0.299 (111)	0.221 (3.23)
¾ (19.1)	2.2 (10.7)	0.257 (2423)	0.604 (224)	0.477 (6.97)	0.097 (918)	0.521 (193)	0.292 (4.25)
⅞ (22.2)	2.6 (12.7)	0.390 (3672)	0.786 (291)	0.575 (8.40)	0.160 (1505)	0.721 (267)	0.432 (6.30)
1 (25.4)	3.0 (14.6)	0.547 (5153)	1.003 (372)	0.620 (9.05)	0.286 (2693)	1.080 (400)	0.503 (7.34)
1⅛ (28.6)	3.3 (16.1)	0.736 (6928)	1.156 (428)	0.689 (10.06)	0.420 (3953)	1.361 (504)	0.604 (8.81)

Table 13-6 *(Continued)*

Plyform Structural I

½ (12.7)	1.5 (7.3)	0.117	0.523	0.501	0.043	0.344	0.278
		(1102)	(194)	(7.31)	(410)	(127)	(4.06)
⅝ (15.9)	1.8 (8.8)	0.196	0.697	0.536	0.067	0.459	0.313
		(1850)	(258)	(7.83)	(636)	(170)	(4.57)
¾ (19.1)	2.2 (10.7)	0.303	0.896	0.631	0.162	0.807	0.413
		(2853)	(332)	(9.21)	(1525)	(299)	(6.02)
⅞ (22.2)	2.6 (12.7)	0.475	1.208	0.769	0.268	1.117	0.611
		(4477)	(448)	(11.22)	(2528)	(414)	(8.92)
1 (25.4)	3.0 (14.6)	0.718	1.596	0.814	0.481	1.679	0.712
		(6765)	(592)	(11.88)	(4533)	(622)	(10.39)
1⅛ (28.6)	3.3 (16.1)	0.934	1.843	0.902	0.711	2.119	0.854
		(8798)	(683)	(13.16)	(6694)	(785)	(12.47)

*All properties adjusted to account for reduced effectiveness of plies with grain perpendicular to applied stress. Stresses adjusted for wet conditions, load duration, and experience factors.

Table 13–7 Section properties of U.S. standard lumber and timber (b = width, d = depth)

Nominal Size ($b \times d$)	Actual Size (S4S)		Area of Section A		Section Modulus S		Moment of Inertia I	
in.	in.	mm	in.^{2}	10^3 mm^2	in.^{3}	10^5 mm^3	in.^{4}	10^6 mm^4
1 × 3	0.75 × 2.5	19 × 64	1.875	1.210	0.7812	0.1280	0.9766	0.4065
1 × 4	0.75 × 3.5	19 × 89	2.625	1.694	1.531	0.2509	2.680	1.115
1 × 6	0.75 × 5.5	19 × 140	4.125	2.661	3.781	0.6196	10.40	4.328
1 × 8	0.75 × 7.25	19 × 184	5.438	3.508	6.570	1.077	23.82	9.913
1 × 10	0.75 × 9.25	19 × 235	6.938	4.476	10.70	1.753	49.47	20.59
1 × 12	0.75 × 11.25	19 × 286	8.438	5.444	15.82	2.592	88.99	37.04
2 × 3	1.5 × 2.5	38 × 64	3.750	2.419	1.563	0.2561	1.953	0.8129
2 × 4	1.5 × 3.5	38 × 89	5.250	3.387	3.063	0.5019	5.359	2.231
2 × 6	1.5 × 5.5	38 × 140	8.250	5.323	7.563	1.239	20.80	8.656
2 × 8	1.5 × 7.25	38 × 184	10.88	7.016	13.14	2.153	47.63	19.83
2 × 10	1.5 × 9.25	38 × 235	13.88	8.952	21.39	3.505	98.93	41.18
2 × 12	1.5 × 11.25	38 × 286	16.88	10.89	31.64	5.185	178.0	74.08
2 × 14	1.5 × 13.25	38 × 337	19.88	12.82	43.89	7.192	290.8	121.0
3 × 4	2.5 × 3.5	64 × 89	8.750	5.645	5.104	0.8364	8.932	3.718
3 × 6	2.5 × 5.5	64 × 140	13.75	8.871	12.60	2.065	34.66	14.43
3 × 8	2.5 × 7.25	64 × 184	18.12	11.69	21.90	3.589	79.39	33.04
3 × 10	2.5 × 9.25	64 × 235	23.12	14.91	35.65	5.842	164.9	68.63
3 × 12	2.5 × 11.25	64 × 286	28.12	18.14	52.73	8.642	296.6	123.5
3 × 14	2.5 × 13.25	64 × 337	33.12	21.37	73.15	11.99	484.6	201.7
3 × 16	2.5 × 15.25	64 × 387	38.12	24.60	96.90	15.88	738.9	307.5
4 × 4	3.5 × 3.5	89 × 89	12.25	7.903	7.146	1.171	12.50	5.205
4 × 6	3.5 × 5.5	89 × 140	19.25	12.42	17.65	2.892	48.53	20.20
4 × 8	3.5 × 7.25	89 × 184	25.38	16.37	30.66	5.024	111.1	46.26
4 × 10	3.5 × 9.25	89 × 235	32.38	20.89	49.91	8.179	230.8	96.08
4 × 12	3.5 × 11.25	89 × 286	39.38	25.40	73.83	12.10	415.3	172.8
4 × 14	3.5 × 13.25	89 × 337	46.38	29.92	102.4	16.78	678.5	282.4
4 × 16	3.5 × 15.25	89 × 387	53.38	34.43	135.7	22.23	1034	430.6
6 × 6	5.5 × 5.5	140 × 140	30.25	19.52	27.73	4.543	76.25	19.52
6 × 8	5.5 × 7.5	140 × 191	41.25	26.61	51.56	8.450	193.4	80.48
6 × 10	5.5 × 9.5	140 × 241	52.25	33.71	82.73	13.56	393.0	163.6
6 × 12	5.5 × 11.5	140 × 292	63.25	40.81	121.2	19.87	697.1	290.1
6 × 14	5.5 × 13.5	140 × 343	74.25	47.90	167.1	27.38	1128	469.4
6 × 16	5.5 × 15.5	140 × 394	85.25	55.00	220.2	36.09	1707	710.4

Table 13–7 *(Continued)*

Nominal Size ($b \times d$)	Actual Size (S4S)		Area of Section A		Section Modulus S		Moment of Inertia I	
in.	in.	mm	in.^{2}	10^3 mm^2	in.^{3}	10^5 mm^3	in.^{4}	10^6 mm^4
6 × 18	5.5 × 17.5	140 × 445	96.25	62.10	280.7	46.00	2456	1022
6 × 20	5.5 × 19.5	140 × 495	107.2	69.19	348.6	57.12	3398	1415
6 × 22	5.5 × 21.5	140 × 546	118.2	76.29	423.7	69.44	4555	1896
6 × 24	5.5 × 23.5	140 × 597	129.2	83.39	506.2	82.96	5948	2476
8 × 8	7.5 × 7.5	191 × 191	56.25	36.29	70.31	11.52	263.7	109.8
8 × 10	7.5 × 9.5	191 × 241	71.25	45.97	112.8	18.49	535.9	223.0
8 × 12	7.5 × 11.5	191 × 292	86.25	55.65	165.3	27.09	950.5	395.7
8 × 14	7.5 × 13.5	191 × 343	101.2	65.32	227.8	37.33	1538	640.1
8 × 16	7.5 × 15.5	191 × 394	116.2	75.00	300.3	49.21	2327	968.8
8 × 18	7.5 × 17.5	191 × 445	131.2	84.68	382.8	62.73	3350	1394
8 × 20	7.5 × 19.5	191 × 495	146.2	94.36	475.3	77.89	4634	1929
8 × 22	7.5 × 21.5	191 × 546	161.2	104.0	577.8	94.69	6211	2585
8 × 24	7.5 × 23.5	191 × 597	176.2	113.7	690.3	113.1	8111	3376
10 × 10	9.5 × 9.5	241 × 241	90.25	58.23	142.9	23.42	678.8	282.5
10 × 12	9.5 × 11.5	241 × 292	109.2	70.48	209.4	34.31	1204	501.2
10 × 14	9.5 × 13.5	241 × 343	128.2	82.74	288.6	47.29	1948	810.7
10 × 16	9.5 × 15.5	241 × 394	147.2	95.00	380.4	62.34	2948	1227
10 × 18	9.5 × 17.5	241 × 445	166.2	107.3	484.9	79.46	4243	1766
10 × 20	9.5 × 19.5	241 × 495	185.2	119.5	602.1	98.66	5870	2443
10 × 22	9.5 × 21.5	241 × 546	204.2	131.8	731.9	119.9	7868	3275
10 × 24	9.5 × 23.5	241 × 597	223.2	144.0	874.4	143.3	10274	4276
12 × 12	11.5 × 11.5	292 × 292	132.2	85.32	253.5	41.54	1458	594.2
12 × 14	11.5 × 13.5	292 × 343	155.2	100.2	349.3	57.24	2358	981.4
12 × 16	11.5 × 15.5	292 × 394	178.2	115.0	460.5	75.46	3569	1485
12 × 18	11.5 × 17.5	292 × 445	201.2	129.8	587.0	96.19	5136	2138
12 × 20	11.5 × 19.5	292 × 495	224.2	144.7	728.8	119.4	7106	2958
12 × 22	11.5 × 21.5	292 × 546	247.2	159.5	886.0	145.2	9524	3964
12 × 24	11.5 × 23.5	292 × 597	270.2	174.4	1058	173.4	12437	4276
14 × 14	13.5 × 13.5	343 × 343	182.2	117.5	410.1	67.20	2768	1152
14 × 16	13.5 × 15.5	343 × 394	209.2	135.0	540.6	88.58	4189	1744
14 × 18	13.5 × 17.5	343 × 445	236.2	152.4	689.1	112.9	6029	2510
14 × 20	13.5 × 19.5	343 × 495	263.2	169.8	855.6	140.2	8342	3472
14 × 22	13.5 × 21.5	343 × 546	290.2	187.3	1040	170.4	11181	4654
14 × 24	13.5 × 23.5	343 × 597	317.2	204.7	1243	203.6	14600	6077

METHOD OF ANALYSIS

Basis of Analysis

- **Typical allowable stress values for lumber are given in Table 13-8. The allowable unit stress values in Table 13-8 (but not modulus of elasticity values) may be multiplied by a load duration factor of 1.25 (7-d load) when designing formwork for light construction and single use or very limited reuse of forms.**

- **Allowable stresses for lumber sheathing (not Plyform®) should be reduced by the factors given in Table 13-8 for wet conditions.**

- **The values for Plyform® properties presented in Table 13-6 are based on wet strength and 7-d load duration, so no further adjustment in these values is required.**

Table 13-8 Typical values of allowable stress for lumber

Species (No. 2 Grade, 4 × 4 [100 × 100 mm] or smaller)	Allowable Unit Stress (lb/sq in.)[kPa] (Moisture Content = 19%)					
	F_b	F_v	$F_{c\perp}$	F_c	F_t	E
Douglas fir—larch	1450 [9998]	185 [1276]	385 [2655]	1000 [6895]	850 [5861]	1.7×10^6 [11.7×10^6]
Hemlock—fir	1150 [7929]	150 [1034]	245 [1689]	800 [5516]	675 [4654]	1.4×10^6 [9.7×10^6]
Southern pine	1400 [9653]	180 [1241]	405 [2792]	975 [6723]	825 [5688]	1.6×10^6 [11.0×10^6]
California redwood	1400 [9653]	160 [1103]	425 [2930]	1000 [6895]	800 [5516]	1.3×10^6 [9.0×10^6]
Eastern spruce	1050 [7240]	140 [965]	255 [1758]	700 [4827]	625 [4309]	1.2×10^6 [8.3×10^6]
Reduction factor for wet conditions	0.86	0.97	0.67	0.70	0.84	0.97
Load duration factor (7-day load)	1.25	1.25	1.25	1.25	1.25	1.00

Thank You

Questions ?